M-WM-T-V2

Fixed Dome Outdoor Wall Mount

Technical Specifications

Bracket	M-WM-T-V2
Application	wall installation for fixed dome (Extra back outlet), M-46-V-V2, M-44-V-V3, M-44-V-T-V2, M-24-V-T, M-26-V, M-24-FW-T
Dimensions	235.0 mm X 126.2 mm X 128.5 mm (9.3” x 5.0”x 5.1”)
Weight	0.84kg (1.84lb)
Material	Aluminum alloy
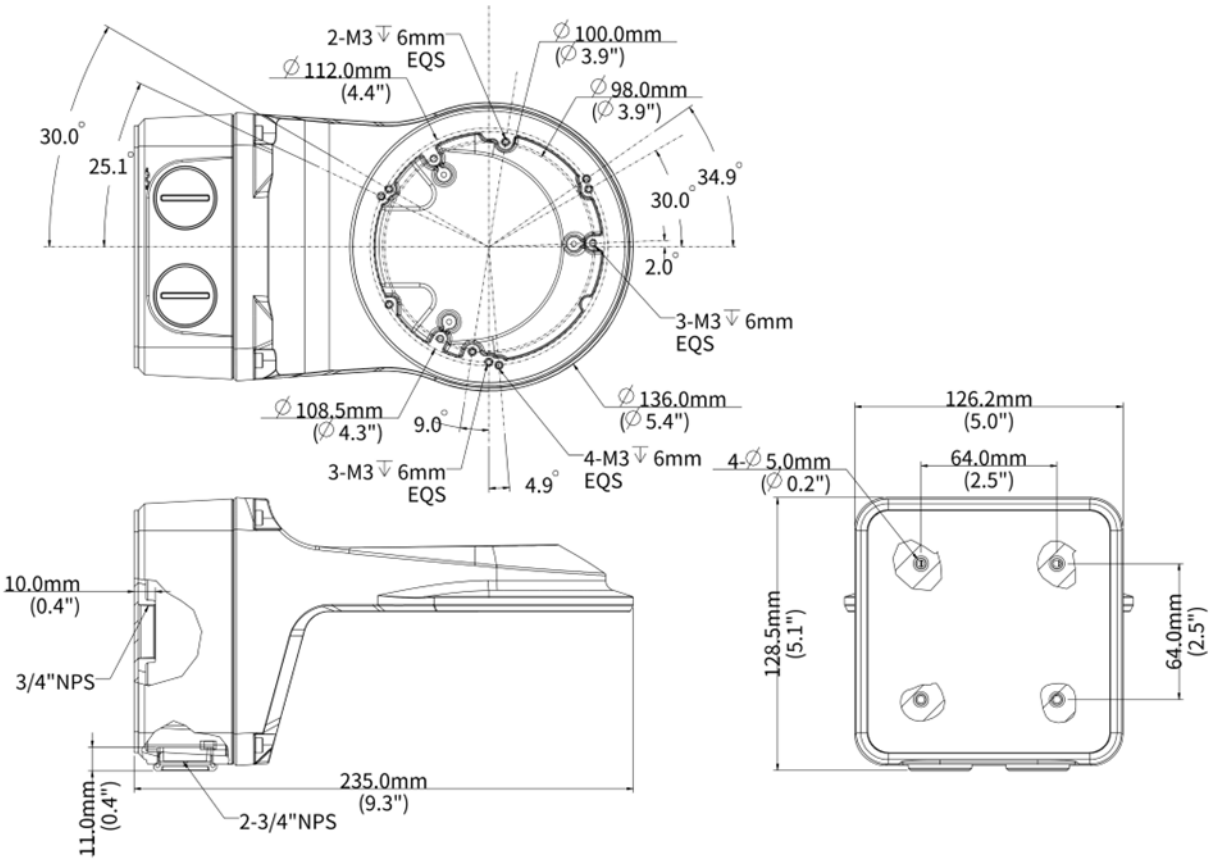
Dimensions