PS-API

Interface Specifications for OCX

Edition 13.10 R01
Dec. 20, 2023

i-PRO Co., Ltd.

Revision Record

Version	Revised Date	Content of Revision
0.9	Feb. 1, 2009	First Edition
1.0	Feb. 16, 2009	Baseline
1.1	Feb. 25, 2009	Install ActiveX control of Network Camera is supported.
1.2	Jul. 27, 2009	Add chart / table reference number.
		5.3.1.4. Add Search condition. 5.5.1.4. Add preset functions to CameraOperation method.
1.2 R02	Sep. 30, 2009	Correct the following points of this document. 2.3. Change the firmware version of DG-ND200/WJ-ND200. 5.5.1.1. Change the description of tilt speed.
2.0 R01	Oct 16, 2009	1.6. Add the description of Download function to Overview of Functions. 1.7. Add the description of SearchEx method, OnSerachEXCB, FTP functions to Function list. 1.8. Add SearchEx method, FTP functions to Compatible chart by models. 2.3. Add HD600/700 series and NP502/NW502S series to supported devices. 3.1. Update Product list. 4.4.2. Add the description of FTP function. 5.1.1.1. Add SearchEx method. 5.1.1.1. Add GetDevTimeZone method. 5.1.1.1. Add FtpGet method. 5.1.1.1. Add FtpCancel method. 5.1.1.1. Add FtpServerClose method. 5.1.1.1. Add GetFtpStatus method. 5.1.1.1. Add GetFtpTransRate method. 5.1.1.1. Add GetFtpTransByte method. 5.1.1.1. Add SearchResultEx property. 5.1.1.1. Add OnSearchExCBEnable property. 5.1.1.1. Add H264Port property. 5.1.1.1. Add H264Resolution property. 5.1.1.1. Add MulticastAutoConf property. 5.1.1.1. Add StreamNumber property. 5.1.1.1. Add TransFrameRate property. 5.1.1.1. Add FtpPort property. 5.1.1.1. Add FtpTransMode property. 5.1.1.1. Add OnFtpStatusCBEnable property. 5.1.1.1. Add OnSearchExCB event. 5.1.1.1. Add OnFtpStatusCB event. 5.2.2.1. Add the description of HD600/700 to DeviceType property. 5.2.2.8. Add the description of HD600/700 to UID property. 5.3.1.1. Add the description of HD600/700 to GetDeviceStatus method. 5.3.1.2. Add the description of HD600/700 to RecCtrl method. 5.3.1.3. Add the description of HD600/700 to GetRecCtrlStatus method. 5.3.1.4. Add the description of HD600/700 to Search method. 5.3.1.4. Add condition type to Search method.

Version	Revised Date	Content of Revision
2.0 R01	Oct 16, 2009	5.3.1.5. Add SearchEx method. 5.3.1.6. Add GetDevTimeZone method 5.3.2.2. Add the event type of HD600/700 to SearchResult property. 5.3.2.3. Add SearchResultEx property. 5.3.3.1. Add the description of HD600/700 to OnDevStatus event. 5.3.3.2. Add the description of HD600/700 to OnRecStatus event. 5.3.3.5. Add OnSearchExCB event. 5.4.1.1. Add the description of HD600/700 to GetFrameTime method. 5.4.1.2. Add the description of HD600/700 and H.264 to PlayLive method. 5.4.1.3. Add the description of HD600/700 and skip to the latest record to Play method. 5.4.1.5. Add the description of HD600/700 PlayControl method. 5.4.1.7. Add the description of HD600/700 GetPlaySpeed method. 5.4.1.8. Add the description of HD600/700 GetFrameRate method. 5.4.2.2. Add H264Port property. 5.4.2.3. Add the description of H.264 to MulticastAddr property. 5.4.2.5. Add H264Resolution property. 5.4.2.6. Add the resolution type 2048 to JPEGResolution property. 5.4.2.7. Add the description of H.264 to StreamFormat property. 5.4.2.7 Add the description about getting property automatically to StreamFormat. 5.4.2.8. Add MulticastAutoConf property. 5.4.2.9. Add StreamNumber property. 5.4.2.10. Add TransFrameRate property. 5.4.3.1. Add the description of HD600/700 to OnPlayStatus event. 5.5.1.1. Add the description of HD600/700 to CameraControl method. 5.5.1.4. Add the description of HD600/700 to CameraOperation method. 5.5.1.5. Add the description of HD600/700 to GetCameraOperationStatus method. 5.5.3.1. Add the description of HD600/700 to OnOpStatus event. 5.5.3.2. Add the description of HD600/700 to OnOpStatusCB event. 5.6.1.1. Add the description of HD600/700 to AlarmOperation method. 5.6.3.1. Add the description of HD600/700 to OnAlmStatus event. 5.7. Add the description of FTP group functions.

Version	Revised Date	Content of Revision
2.0 R01	Oct 16, 2009	6. Add the description of HD600/700 to Operation Procedure and Sequence. 6. Add the description of H.264 to Operation Procedure and Sequence. 6.10. Add Operation Procedure and Sequence of FtpGet.
2.0 R01	Oct. 30, 2009	Correct the following points of this document. 5.5.1.1 Add the description of Pan/Tilt direction depending on camera setting condition. 5.5.1.2 Add the description of Pan/Tilt direction depending on camera setting condition. 5.5.1.3 Add the description of Pan/Tilt direction depending on camera setting condition. 5.5.2.3 Add the description of Pan/Tilt direction depending on camera setting condition. 5.5.2.4 Add the description of Pan/Tilt direction depending on camera setting condition. 5.2.2.4 Add the description of HttpTimeout.
2.0 R01	Nov. 9, 2009	Update Package contents list
2.0 R02	Dec. 1, 2009	Update by QC indication.
2.0 R02	Dec. 24 2009	Correct the spelling.
2.0 R03	Jan. 26, 2010	Change company name.
3.0 R01	Jun. 23, 2010	1.4 Deleted VisualC++6.0, VisualC++2005 and Visaul Basic 6.0 from Abbreviations. 1.6 Added "Image recognition" to Overview of Functions. 1.6 Added "Digital zoom, Overlay" to Overview of Functions. 1.6 Added "Snap Shot" to Overview of Functions. 1.6 Added "Audio reception and transmission" to Overview of Functions. 1.6 Added "Auto Back Focus functions, Super Dynamic function" to camera control function of Overview of Functions. 1.6 Added "Control AUX" to Overview of Functions. 1.7 Added ClearWaitingFunc、GetWaitingFuncCount method to the function list. 1.7 Added VmdSearchEx method to the function list. 1.7 Added SearchCancel method to the function list. 1.7 Added GetDeviceLog method to the function list. 1.7 Added GetDevCurrentInfo method and GetInfoString method to the function list. 1.7 Added PlayControlByTime method to the function list. 1.7 Added GetImageResolution method to the function list. 1.7 Added SaveJpegImage method, GetJpegImagemethod, SaveBitmapImage method and GetBitmapImage method. 1.7 Added TitleOperation method, GetTitle method and BoxOperation method to the function list. 1.7 Added DigitalZoomMove method to the function list. 1.7 Added SetIntelligentView method, GetIntelligentView method, SetIntelligentViewColor method, GetIntelligentViewColor method, SetIntelligentViewSize method, GetIntelligentViewSize method, SetIntelligentViewTrackTime method and GetIntelligentTrackTime method to the function list.

Version	Revised Date	Content of Revision
3.0 R01	Jun. 23, 2010	1.7 Added AudioSend method, GetAudioSendStatus method to the function list. 1.7 Added CameraCentering method to the function list. 1.7 Added CameraAuxControl method and GetCameraAuxStatus method to the function list. 1.7 Added OnRecordStatus method to the function list. 1.8 Updated the list of compatible chart by models. 2.1 Addeed Windows 7 Professional to System Environment. 2.1 Deleted Pentium4 from System Environment. 2.2 Deleted C++ 6.0, Visual C++ 2005 and Visual Basic 6.0 from System Environment. 5.1.1.1 Added ClearWaitingFunc method and GetWaitingFuncCount method. 5.1.1.1 Added VmdSearchEx method and SearchCancel method. 5.1.1.1 Added GetDeviceLog method. 5.1.1.1 Added GetDevCurrentInfo method and GetInfoString method. 5.1.1.1 Added PlayControlByTime method. 5.1.1.1 Added GetImageResolution method. 5.1.1.1 Added SaveJpegImage method. 5.1.1.1 Added GetJpegImage method. 5.1.1.1 Added SaveBitmapImage method. 5.1.1.1 Added GetBitmapImage method. 5.1.1.1 Added TitleOperation method, GetTitle method and BoxOperation method. 5.1.1.1 Added DigitalZoomMove method. 5.1.1.1 Added GetDigitalZoomPosition method. 5.1.1.1 Added SetIntelligentView method, GetIntelligentView method, SetIntelligentViewColor method, GetIntelligentViewColor method, SetIntelligentViewSize method, GetIntelligentViewSize method, SetIntelligentViewTrackTime method and GetIntelligentViewTrackTime method. 5.1.1.1 Added AudioSend method and GetAudioSendStatus method. 5.1.1.1 Added CameraCentering method. 5.1.1.1 Added CameraAuxControl method and GetCameraAuxStatus method. 5.1.1.1 Added SearchMultiChMask property. 5.1.1.1 Added ImageResolutionWidth property and ImageResolutionHeight property. 5.1.1.1 Added DigitalZoom property, DigitalZoomMode property, DigitalZoomPositionX property and DigitalZoomPositionY property. 5.1.1.1 Added SkipRecordGap property. 5.1.1.1 Added MultiScreenChannel property. 5.1.1.1 Added OnRecordStatusEnable property. 5.1.1.1 Added AudioRcvEnable property, AudioRcvVolume property, AudioRcvMute property, AudioSendVolume property and AudioSendMute property. 5.1.1.1 Added OnRecordStatus event.

Version	Revised Date	Content of Revision
3.0 R01	Jun. 23, 2010	5.2.1.5 Added ClearWaitingFunc method. 5.2.1.6 Added GetWaitingFuncCount method. 5.3.1.6 Added VmdSearchEx method. 5.3.1.7 Added SearchCancel method. 5.3.1.8 Added GetDeviceLog method. 5.3.1.10 Added GetDevCurrentInfo method. 5.3.1.11 Added GetInfoString method. 5.3.2.2 Added SearchMultiChMask property. 5.4.1.5 Added Next recoed and Previous record to PlayControl method. 5.4.1.6 Added PlayControlByTime method. 5.4.1.10 Added GetImageResolution method. 5.4.1.12 Added SaveJpegImage method. 5.4.1.13 Added GetJpegImage method. 5.4.1.14 Added SaveBitmapImage method. 5.4.1.15 Added GetBitmapImage method. 5.4.1.16 Added TitleOperation method. 5.4.1.17 Added GetTitle method. 5.4.1.18 Added BoxOperation method. 5.4.1.19 Added DigitalZoomMove method. 5.4.1.20 Added GetDigitalZoomPosition method. 5.4.1.21 Added SetIntelligentView method. 5.4.1.22 Added GetIntelligentView method. 5.4.1.23 Added SetIntelligentViewColor method. 5.4.1.24 Added GetIntelligentViewColor method. 5.4.1.25 Added SetIntelligentViewSize method. 5.4.1.26 Added GetIntelligentViewSize method. 5.4.1.27 Added SetIntelligentViewTrackTime method. 5.4.1.28 Added GetIntelligentViewTrackTime method. 5.4.2.7 Added ImageResolutionWidth property. 5.4.2.8 Added ImageResolutionHeight property. 5.4.2.13 Added DigitalZoom property. 5.4.2.14 Added DigitalZoomMode property. 5.4.2.15 Added DigitalZoomPositionX property. 5.4.2.16 Added DigitalZoomPositionY property. 5.4.2.17 Added SkipRecordGap property. 5.4.2.18 Added MultiScreenChannel property. 5.4.2.20 Added OnRecordStatusEnable property. 5.4.3.2 Added OnRecordStatus event.

Version	Revised Date	Content of Revision
3.0 R01	Jun. 23, 2010	5.5.1.1 Added AudioSend method. 5.5.1.2 Added GetAudioSendStatus method. 5.5.2.1 Added AudioRcvEnable property. 5.5.2.2 Added AudioRcvVolume property. 5.5.2.3 Added AudioRcvMute property. 5.5.2.4 Added AudioSendVolume property. 5.5.2.5 Added AudioSendMute property. 5.6.1.4 Added Auto back Focus functions and Super Dynamic function to CameraOperation method. 5.6.1.6 Added CameraCentering method. 5.7.1.7 Added CameraAuxControl method. 5.7.1.8 Added GetCameraAuxStatus method.
3.0 R02	Jul. 30, 2010	1.7 Added MultiSyncPause method and MultiSyncTime method. 1.8 Deleted ND300 from the list of device that can specify the playback speed directly. 4.3 Added MultiSyncPause method and MultiSyncTime method to the network playback of "Restrictions of the usage when using the shared UID" section. 5.1.1.1 Added the argument of summer time information to PlayControlByTime method. 5.1.1.1 Added MultiSyncPausemethod and MultiSyncTime method. 5.1.1.1,Added the argument of summer time information to OnRecordStatus method. 5.4.1.5 Deleted ND300 from the list of device that can specify the playback speed directly. 5.4.1.6 Added the argument of summer time information to PlayControlByTime method. 5.4.1.29 Added MultiSyncPause method. 5.4.1.30 Added MultiSyncTime method 5.4.3.2 Added the argument of summer time information to OnRecordStatus. 5.4.3.2 Added the description that OnRecordStatus doesn't occur with file playback. 5.5.1.1 Added the description about audio transmission in case that send audio to the full duplex mode device or the half duplex mode device. 6.12 Added the operation procedure and the sequence for Audio. 6.13 Added the operation procedure and the sequence for SnapShot. 6.14 Added the operation procedure and the sequence for Overlay. 6.15 Added the operation procedure and the sequence for VmdSearchEx.
3.0 R02	Aug. 4, 2010	2.3 Update Supported Panasonic Products.
3.0 R02	Aug. 17, 2010	3.1.1 Update Package contents list. 3.2 Added the VC++ runtime install procedure. 3.3 Added the VC++ runtime uninstall procedure.

Version	Revised Date	Content of Revision
4.0 R01	Dec. 14, 2010	1.7. Add the description of GetPicturePosition method to Function list. 1.8. Add GetPicturePosition to Compatible chart by models. 2.3. Add NV200 series, SC385 series and SP105/SP102 series to supported devices. 3 Separate Install/Uninstall procedure. 3.5 Update the description of UID in Restrictions. 4.2 Added the limitation description about NV200 connection. 5.1.1.1 Added GetPicturePosition method. 5.1.1.1 Added FilePassword property. 5.1.1.1 Added PictureFitMode property. 5.1.1.1 Added PicturePosTopX property. 5.1.1.1 Added PicturePosTopY property. 5.1.1.1 Added PicturePosBottomX property. 5.1.1.1 Added PicturePosBottomY property. 5.3.1.2 Added the description that NV200 doesn't support Manual recording to Note of RecCtrl method. 5.4.1.4 Added the description about FilePassword property to Note of PlayFile method. 5.4.1.10 Added GetPicturePosition method. 5.4.2.5 Added 16:9 resolution to H264Resolution property. 5.4.2.6 Added 16:9 resolution to JPEGResolution property. 5.4.2.10 Added FilePassword property. 5.4.2.14 Added PictureFitMode property. 5.4.2.15 Added PicturePosTopX property. 5.4.2.16 Added PicturePosTopY property. 5.4.2.17 Added PicturePosBottomX property. 5.4.2.18 Added PicturePosBottomY property. 5.6.1.4 Added Preset sequence, Auto sort, Patrol functions to CameraOperation method. 6.3.1 Added FilePassword to Operation Procedure of PlayFile. 6.3.2 Added FilePassword to Sequence of PlayFile. 7 Update error code list.
4.1 R01	Aug. 23, 2011	2.1 Added Windows 7 Professional SP1 to System Environment. 2.1 Added Microsoft® Windows Server® 2003 to System Environment. 2.3. Added SW355 series, SC384 series, SW395 and SF340 series to supported devices. 5.1.1.1 Added InternetMode property. 5.4.2.13 Added InternetMode property. 7 Updated error code list.

Version	Revised Date	Content of Revision
5.0 R01	Dec. 21, 2011	2.1 Added Microsoft® Windows Server® 2008 R2 to System Environment. 2.3 Separate supported devices to another document (PS-API Supported Product List). 5.2.2.2 Added IPv6 description. 5.3.1.12 Added SetCameraTime method. 5.4.1.18 Added TitleOperationEx method. 5.4.1.21 Added BoxOperationEx method. 5.4.1.22 Added BitmapOperationEx method. 5.4.2.3 Added RtpPortMode property. 5.4.2.4 Added RtpPortRange propery. 5.4.2.16 Added FastPlayMode property.
5.0 R02	Feb. 16, 2012	5.6.1.4 SC386 and SW396 support Patrol function of CameraOperation.
6.0 R01	Apr. 27, 2012	1.7. Add the description of GetLoginStatus method, GetUIDInfo method, GetSIDInfo method, GetStatisticsData method and SetUIDPriority method to Function list. 1.8. Add GetLoginStatus method, GetUIDInfo method, GetSIDInfo method, GetStatisticsData method and SetUIDPriority method to Compatible chart by models. 4.3 Added the description of StreamID. 5.2.1.7 Added GetLoginStatus method. 5.2.1.8 Added GetUIDInfo method. 5.2.1.9 Added GetSIDInfo method. 5.2.2.11 Added UIDInfoMax property. 5.2.2.12 Added UIDInfoUse property. 5.2.2.13 Added SIDInfoMode property. 5.2.2.14 Added SIDInfoMax property. 5.2.2.15 Added SIDInfoUse property. 5.3.1.13 Added GetStatisticsData method. 5.3.1.14 Added SetUIDPriority method. 5.4.2.29 Added SIDMode property. 7 Updated error code list.
6.0 R02	Jul. 7, 2012	Add SF539 series and SF549 series to supported devices.

Version	Revised Date	Content of Revision
7.0 R01	Dec. 25, 2012	1.7. Added the description of CamSnapShot method to Function list. 1.7.Deleted the description of SetIntelligentView method, GetIntelligentView method, SetIntelligentViewColor method, GetIntelligentViewColor method, SetIntelligentViewSize method , GetIntelligentViewSize method, SetIntelligentViewTrackTime method and GetIntelligentTrackTime method from Function list. 1.8. Added CamSnapShot method to Compatible chart by models. 4.7 Added the description of 360-degree network camera. 5.1.1.1 Deleted SetIntelligentView method, GetIntelligentView method, SetIntelligentViewColor method, GetIntelligentViewColor method, SetIntelligentViewSize method , GetIntelligentViewSize method, SetIntelligentViewTrackTime method and GetIntelligentTrackTime method from list. 5.1.1.1 Added CamSnapShot method to list. 5.4.1.25 Deleted SetIntelligentView method. 5.4.1.26 Deleted GetIntelligentView method. 5.4.1.27 Deleted SetIntelligentViewColor method. 5.4.1.28 Deleted GetIntelligentViewColor method. 5.4.1.29 Deleted SetIntelligentViewSize method. 5.4.1.30 Deleted GetIntelligentViewSize method. 5.4.1.31 Deleted SetIntelligentViewTrackTime method. 5.4.1.32 Deleted GetIntelligentViewTrackTime method. 5.4.1.35 Added CamSnapShot method. 7 Updated error code list.
7.1 R01	Mar. 21, 2013	1.7. Add the description of SetCameraImageCap method to Function list. 1.8. Add SetCameraImageCap method to Compatible chart by models. 1.8 Added the limitation description about RecCtrl method. 2.1 Added Microsoft® Windows® 8 Pro to System Environment. 5.1.1.1 Added SetCameraImageCap method to list. 5.4.1.9 Updated the note of GetFrameRate method. 5.6.1.9 Added Add SetCameraImageCap method. 7 Updated error code list.

Version	Revised Date	Content of Revision
7.2 R01	Jul. 12, 2013	1.8. Added new model of 360-degree Network Camera. 4.7. Added new model of 360-degree Network Camera . 5.4.1.1. Updated Retun Value of GetFrameTime method 5.4.1.2. Updated Argument and Note of PlayLive method. 5.4.1.35. Updated Argument of CamSnapShot method. 5.4.2.14. Updated Note of StreamNumber property. 5.4.3.1. Updated Argument of OnPlayStatus method. 5.6.1.1. Updated Argument and Note of CameraControl method. 5.6.1.2. Updated Argument and Note of SetCameraPosition method 5.6.1.3. Updated Note of GetCameraPosition method. 5.6.1.4. Updated Argument and Note of CameraOperation method. 5.6.1.5. Updated Argument of GetCameraOperationStatus method. 5.6.1.6. Updated Argument and Note of CameraCentering method. 5.6.2.3. Updated Argument of CameraPosPan property. 5.6.2.4. Updated Value and Note of CameraPosTilt property. 5.6.2.5. Updated Value of CameraPosZoom property. 5.6.3.1. Updated Argument of OnOpStatus event. 5.7.1.1. Updated Argument of AlarmOperation method. 5.7.3.1. Updated Argument of OnAlmStatus event. 6.5.1 Updated Description of Absolute position camera control (12 SetCameraPosition). 5.4.2.6. Updated Value of MPEG4Resolution property. 5.4.2.7. Updated Value of H264Resolution property. 5.5.2.8. Updated Value of JPEGResolution property. Correction of Typographical Error.
7.4 R01	Mar. 26, 2014	2.1 Added Microsoft® Windows® 8.1 Pro to System Environment. 2.1 Updated System Environment. 4.7 Updated the description of 360-degree network camera. 5.4.2.7. Updated Value of H264Resolution property. 5.5.2.8. Updated Value of JPEGResolution property. 5.4.2.14. Updated Value of StreamNumber property. 5.4.2.31 Added DecResolutionMode property 5.5.1.1. Updated Note of AudioSend method. 5.3.1.12. Updated Note of SetCameraTime method. 5.6.1.4. Updated Argument for CameraOperation method. 7 Updated error code list.

Version	Revised Date	Content of Revision
7.5 R01	Jul. 14, 2014	1.8 Updated Compatible chart by models. 3.5 Updated Restrictions 5.3.1.1 Updated Description, Argument ,Note of GetDeviceStatus method. 5.3.1.2 Updated Note of RecCtrl method. 5.3.1.3 Updated Argument , Note of GetRecCtrlStatus method. 5.3.1.4 Updated Argument of Search method. 5.3.1.5 Updated Argument of SearchEx method. 5.3.1.6 Updated Argument of VMDSearchEx method. 5.3.1.11 Updated Note of GetInfoString method. 5.3.1.12 Updated Note of SetCameraTime method. 5.3.1.13 Updated Description of GetStatisticsData method. 5.3.1.14 Updated Description of SetUIDPriority method. 5.3.3.1 Updated Description , Argument of OnDevStatus event. 5.3.3.2 Updated Description , Argument of OnRecStatus event. 5.4.1.1 Updated Note of GetFrameTime method. 5.4.1.2 Updated Argument of PlayLive method. 5.4.1.3 Updated Argument of Play method. 5.4.1.5 Updated Note of PlayControl method. 5.4.1.8 Updated Note of GetPlaySpeed method. 5.4.2.15 Updated Note of InternetMode property. 5.4.2.16 Updated Note of FastPlayMode property. 5.4.3.1 Updated Argument of OnPlayStatus event. 5.6.1.1 Updated Argument of CameraControl method. 5.6.1.4 Updated Argument of CameraOperation method. 5.6.1.5 Updated Argument of GetCameraOperationStatus method. 5.6.1.6 Updated Argument of CameraCentering method. 5.6.3.1 Updated Argument of OnOpStatus event. 5.7.1.1 Updated Argument of AlarmOperation event. 5.7.3.1 Updated Argument of OnAlmStatus event. 5.8.1.1 Updated Argument of FTPGet method. 5.8.1.3 Updated Note of FTPServerClose method. 7 Updated error code list.

Version	Revised Date	Content of Revision
8.1 R01	Jan. 20, 2015	1.8 Updated Compatible chart by models. 2.1 Updated System Environment. 3.5 Updated Restrictions 5.3.1.1 Updated Description, Argument ,Note of GetDeviceStatus method. 5.3.1.2 Updated Note of RecCtrl method. 5.3.1.3 Updated Argument , Note of GetRecCtrlStatus method. 5.3.1.4 Updated Argument of Search method. 5.3.1.5 Updated Argument of SearchEx method. 5.3.1.6 Updated Argument of VMDSearchEx method. 5.3.1.11 Updated Note of GetInfoString method. 5.3.1.12 Updated Note of SetCameraTime method. 5.3.1.13 Updated Description of GetStatisticsData method. 5.3.1.14 Updated Description of SetUIDPriority method. 5.3.3.1 Updated Description , Argument of OnDevStatus event. 5.3.3.2 Updated Description , Argument of OnRecStatus event. 5.4.1.1 Updated Note of GetFrameTime method. 5.4.1.2 Updated Argument of PlayLive method. 5.4.1.3 Updated Argument of Play method. 5.4.1.5 Updated Note of PlayControl method. 5.4.1.8 Updated Note of GetPlaySpeed method. 5.4.2.7 Updated Argument of H264Resolution property. 5.4.2.8 Updated Argument of JPEGResolution property. 5.4.2.15 Updated Note of InternetMode property. 5.4.2.16 Updated Note of FastPlayMode property. 5.4.3.1 Updated Argument of OnPlayStatus event. 5.6.1.1 Updated Argument of CameraControl method. 5.6.1.4 Updated Argument of CameraOperation method. 5.6.1.5 Updated Argument of GetCameraOperationStatus method. 5.6.1.6 Updated Argument of CameraCentering method. 5.6.1.9 Updated Argument,Note of SetCameraImageCap. 5.6.3.1 Updated Argument of OnOpStatus event. 5.7.1.1 Updated Argument of AlarmOperation event. 5.7.3.1 Updated Argument of OnAlmStatus event. 5.8.1.1 Updated Argument , Note of FTPGet method. 5.8.1.3 Updated Note of FTPServerClose method.
9.0R01	July.17, 2015	2.1 Updated System Environment. 5.4.1.11 Updated H264 black image size of GetImageResolution. 5.4.2.7 Updated Argument of H264Resolution property. 5.4.2.8 Updated Argument of JPEGResolution property.

Version	Revised Date	Content of Revision
9.2 R01	Oct. 14, 2015	1.7. Updated Function list. 1.8. Updated Compatible chart by models. 2.1 Added Microsoft® Windows® 10 Pro to System Environment. 4.8.1 Added the restriction when using “Smart Coding” function of network camera. 5.4.1.36 Added SetCroppingRect method. 5.4.1.37 Added GetCroppingRect method. 5.4.1.38 Added SetCroppingDrawRect method. 5.4.1.39 Added GetCroppingDrawRect method. 5.4.1.40 Added SetCroppingDrawEnable method. 5.4.1.41 Added GetCroppingDrawEnable method. 5.4.1.42 Added SetCroppingMarker method. 5.4.1.43 Added GetCroppingMarker method. 5.4.2.32 Added CroppingEnabled property. 5.4.2.33 Added CropRectLtX property. 5.4.2.34 Added CropRectLtY property. 5.4.2.35 Added CropRectRbX property. 5.4.2.36 Added CropRectRbY property. 5.4.2.37 Added CropDrawRectLtX property. 5.4.2.38 Added CropDrawRectLtY property. 5.4.2.39 Added CropDrawRectRbX property. 5.4.2.40 Added CropDrawRectRbY property. 5.4.2.41 Added CropDrawMode property. 5.4.2.42 Added CropMarkerMode property. 5.4.2.43 Added CropMarkerLtX property. 5.4.2.44 Added CropMarkerLtY property. 5.4.2.45 Added CropMarkerRbX property. 5.4.2.46 Added CropMarkerRbY property. 5.4.2.47 Added CropMarkerLSize property. 5.4.2.48 Added CropMarkerLColor property. 5.4.2.49 Added CropMarkerESize property. 5.4.2.50 Added CropMarkerEColor property. 6.15 Added Cropping function sequesnce 7 Updated error code list.
9.3 R01	Jan. 22, 2016	2.1 Added Microsoft® Windows Server® 2012 Standard to System Environment. 2.1 Added Microsoft® Windows Server® 2012 R2 Standard to System Environment. 2.1 Deleted Microsoft® Windows Server® 2003 Standard 64 bit Edition to System Environment. 2.1 Deleted Microsoft® Windows Server® 2003 Standard 32 bit Edition to System Environment. 2.1 Deleted Microsoft® Windows Server® 2003 Enterprise 64 bit Edition to System Environment. 2.1 Deleted Microsoft® Windows Server® 2003 Enterprise 32 bit Edition to System Environment.
9.4 R01	Apr. 8, 2016	5.3.1.12 Updated Note of SetCameraTime method.

Version	Revised Date	Content of Revision
10.0 R01	Feb. 08, 2017	1.7. Updated Function list. 1.8. Updated Compatible chart by models. 2.1. Updated System Environment 3.5. Updated Restrictions 5.3.1.8 Updated Note of GetUIDInfo 5.3.1.9 Updated Note of GetSIDInfo method. 5.3.2.4 Updated Note of HttpTimeout method. 5.3.1.1 Updated Description , Argument ,Note of GetDeviceStatus method. 5.3.1.2 Updated Note of RecCtrl method. 5.3.1.3 Updated Argument,Note of GetRecStatus method. 5.3.1.4 Updated Argument of Search method. 5.3.1.5 Updated Argument of SearchEx method. 5.3.1.6 Updated Argument of VMDSearchEx method. 5.3.1.11 Updated Note of GetInfoString method. 5.3.1.12 Updated Note of SetCameraTime method. 5.3.1.13 Updated Description of GetStatisticsData method. 5.3.1.14 Updated Description of SetUIDPriority method. 5.3.3.1 Updated Description , Argument of OnDevStatus event. 5.3.3.3 Updated Description , Argument of OnRecStatus event. 5.4.1.1 Updated Note of GetFrameTime method. 5.4.1.2 Updated Argument of PlayLive method. 5.4.1.3 Updated Argument,Note of Play method. 5.4.1.5 Updated Note of PlayControl method. 5.4.1.8 Updated Note of GetPlaySpeed method. 5.4.2.7 Updated Argument of H264Resolution property. 5.4.2.8 Updated Argument of JPEGResolution property. 5.4.2.15 Updated Note of InternetMode property. 5.4.2.16 Updated Note of FastPlayMode property. 5.6.1.1 Updated Argument of CameraControl method. 5.6.1.4 Updated Argument of CameraOperation method. 5.6.1.5 Updated Argument of GetCameraOpStatus method. 5.6.1.6 Updated Argument of CameraCentering method. 5.6.1.9 Updated Argument,Note of SetCameraImageCap method. 5.6.1.10 Added CameraWiperControl method. 5.6.3.1 Updated Argument of OnOpStatus event. 5.7.1.1 Updated Argument of AlmOperation method. 5.7.3.1 Updated Argument of OnAlmStatus event. 5.8.1.1 Updated Argument,Note of FTPGet method. 5.8.1.3 Updated Note of FTPServerClose method. 7 Updated error code list.

Version	Revised Date	Content of Revision
10.1 R01	Jun. 19, 2017	Change company name. 2.1 Deleted Microsoft® Windows® XP Professional SP3 from System Environment. 2.1 Deleted Microsoft® Windows Vista® Business SP2 32 bit Edition from System Environment. 3.5. Updated Restrictions 5.2.2.2 Updated Note of IPAddr 5.2.2.5 Updated Note of ProxyName 5.2.2.11 Updated Note of UIDInfoMax 5.2.2.14 Updated Note of SIDInfoMax 5.3.1.1 Updated Description , Argument ,Note of GetDeviceStatus method. 5.3.1.2 Updated Note of RecCtrl method. 5.3.1.3 Updated Argument,Note of GetRecStatus method. 5.3.1.4 Updated Argument of Search method. 5.3.1.5 Updated Argument of SearchEx method. 5.3.1.6 Updated Argument of VMDSearchEx method. 5.3.1.11 Updated Note of GetInfoString method. 5.3.1.12 Updated Note of SetCameraTime method. 5.3.1.13 Updated Description of GetStatisticsData method. 5.3.1.14 Updated Description of SetUIDPriority method. 5.3.3.1 Updated Description , Argument of OnDevStatus event. 5.3.3.3 Updated Description , Argument of OnRecStatus event. 5.4.1.1 Updated Note of GetFrameTime method. 5.4.1.2 Updated Argument of PlayLive method. 5.4.1.3 Updated Argument of Play method. 5.4.1.5 Updated Note of PlayControl method. 5.4.1.8 Updated Note of GetPlaySpeed method. 5.4.2.15 Updated Note of InternetMode property. 5.4.2.16 Updated Note of FastPlayMode property. 5.6.1.1 Updated Argument of CameraControl method. 5.6.1.4 Updated Argument of CameraOperation method. 5.6.1.5 Updated Argument of GetCameraOperationStatus method. 5.6.1.6 Updated Argument of CameraCentering method. 5.6.1.10 Added CameraWiperControl method. 5.6.3.1 Updated Argument of OnOpStatus event. 5.7.1.1 Updated Argument of AlmOperation method. 5.7.3.1 Updated Argument of OnAlmStatus event. 5.8.1.1 Updated Argument,Note of FTPGet method. 5.8.1.3 Updated Note of FTPServerClose method.

Version	Revised Date	Content of Revision
10.3 R01	Dec. 12, 2017	1.6 Updated Overview of functions. 1.7 Updated Function List. 1.8 Updated Compatible chart by models. 2.1 Updated System Environment. 3.5 Updated Restrictions. 4.2 Updated Connect to the device. 4.3 Updated Restrictions of the usage when using the shared UID. 4.5.3 Added MP4 file download. 4.7 Updated image capture mode. 4.8.1 Updated Smart Cording. 5.1.1.1 Updated IPSAPI. 5.2.2.11 Updated Note of UIDInfoMax property. 5.2.2.14 Updated Note of SIDInfoMax property. 5.3.1.1 Updated Description , Argument ,Note of GetDeviceStatus method. 5.3.1.2 Updated Note of RecCtrl method. 5.3.1.3 Updated Argument ,Note of GetRecStatus method. 5.3.1.4 Updated Argument, Note(sub stream of NX Series) of Search method. 5.3.1.5 Updated Argument, Note(sub stream of NX Series) of SearchEx method. 5.3.1.6 Updated Argument, Note(sub stream of NX Series) of VMDSearchEx method. 5.3.1.11 Updated Note of GetInfoString method. 5.3.1.12 Updated Note of SetCameraTime method. 5.3.1.13 Updated Description of GetStatisticsData method. 5.3.1.14 Updated Description of SetUIDPriority method. 5.3.3.1 Updated Description, Argument of OnDevStatus Listener. 5.3.3.2 Updated Description, Argument of OnRecStatus Listener. 5.4.1.1 Updated Note of GetFrameTime method. 5.4.1.2 Updated Argument, Note of PlayLive method. 5.4.1.3 Updated Argument, Note(sub stream of NX Series) of Play method. 5.4.1.4 Updated Note of PlayFile method. 5.4.1.5 Updated Note of PlayControl method. 5.4.1.8 Updated Note of GetPlaySpeed method. 5.4.1.35 Updated Note of CamSnapShot method. 5.4.1.44 Added HttpMP4Download method. 5.4.1.45 Added GetMP4DownloadStatus method. 5.4.1.46 Added GetMP4downloadTransRate method. 5.4.2.7 Updated Argument of H264Resolution property. 5.4.2.8 Updated Arugument of JPEGResolution property. 5.4.2.14 Updated Note of StreamNumber. 5.4.2.15 Added NXStreamNumber property. 5.4.2.16 Updated Note of InternetMode property. 5.4.2.17 Updated Note of FastPlayMode property. 5.4.2.34 Added RcvAudioDec property. 5.4.2.57 Added OnMP4DownloadStatusEnable property. 5.4.3.1 Updated Argument, Note of OnPlayStatus Event. 5.4.3.5 Added OnMP4DownloadStatus Event. 5.6.1.1 Updated Argument, Note of CameraControl method. 5.6.1.2 Updated Note of SetCameraPosition method.

Version	Revised Date	Content of Revision
10.3 R01	Dec. 12, 2017	5.6.1.4 Updated Argument, Note of CameraOperation method. 5.6.1.5 Updated Argument of GetCameraOperationStatus method. 5.6.1.6 Updated Argument, Note of CameraCentering method. 5.6.1.9 Updated Argument, Note of SetCameraImageCap method. 5.6.1.10 Updated Argument of CameraWiperControl method. 5.6.3.1 Updated Argument of OnOpStatus Listener. 5.7.1.1 Updated Argument of AlmOperation method. 5.7.3.1 Updated Argument of OnAlmStatus Listener. 5.8.1.1.Updated Argument, Note of FTPGet method. 5.8.1.3 Updated Note of FTPServerClose method. 6.16 Added Operation Procedure, Sequence of HttpMP4Download. 7 Updated Error Code List.
11.00 R01	Mar. 23, 2018	1.8 Updated Compatible chart by models. 3.5. Updated Restrictions. 4.7 Updated image capture mode. 5.3.1.12 Updated Note of SetCameraTime method. 5.4.1.2 Updated Note of PlayLive method. 5.4.1.3 Updated Note of Play method. 5.4.1.4 Updated Note of PlayFile method. 5.4.2.14 Updated Note of StreamNumber property. 5.4.2.34 Updated Note of RcvAudioDec property. 5.6.1.1 Updated Note of CameraControl method. 5.6.1.2 Updated Argument of SetCameraPosition method. 5.6.1.4 Updated Argument,Note of CameraOperation method. 5.6.1.6 Updated Note of CameraCentering method. 5.6.1.9 Updated Argument of SetCameraImageCap method. 5.6.2.6 Updated Value of CameraPosFocus property.
11.10 R01	Jun.29, 2018	3.5. Updated Restrictions. 5.3.1.2 Updated Description of RecCtrl method. 5.4.1.2 Updated Argument of PlayLive method. 5.4.1.14 Updateed Note of GetJpegImage. 5.4.1.16 Updateed Note of GetBitmapImage. 5.4.2.7 Updated Argument of H264Resolution property. 5.4.2.8 Updated Arugument of JPEGResolution property. 5.6.1.1 Updated Arugument of CameraControl method. 5.6.1.4 Updated Argument of CameraOperation method.

Version	Revised Date	Content of Revision
11.30 R01	Mar.28, 2019	3.5 Updated Restrictions. 5.2.2.11 Updated Note of UIDInfoMax property. 5.2.2.14 Updated Note of SIDInfoMax property. 5.3.1.1 Updated Argument of GetDeviceStatus method. 5.3.1.3 Updated Argument of GetRecStatus method. 5.3.1.4 Updated Argument of Search method. 5.3.1.5 Updated Argument of SearchEx method. 5.3.1.6 Updated Argument of VMDSearchEx method. 5.3.1.12 Updated Note of SetCameraTime method. 5.3.3.1 Updated Argument of OnDevStatus Listener. 5.3.3.2 Updated Argument of OnRecStatus Listener. 5.4.1.2 Updated Argument of PlayLive method. 5.4.1.3 Updated Argument of Play method. 5.4.1.5 Updated Note of PlayControl method. 5.4.1.8 Updated Note of GetPlaySpeed method. 5.4.1.35 Updated Argument of CamSnapShot method. 5.4.1.44 Updated Argument of HttpMP4Download method. 5.4.2.16 Updated Note of InternetMode property. 5.4.2.17 Updated Note of FastPlayMode property. 5.4.3.1 Updated Argument of OnPlayStatus Event. 5.6.1.1 Updated Argument, Note of CameraControl method. 5.6.1.4 Updated Argument of CameraOperation method. 5.6.1.5 Updated Argument of GetCameraOperationStatus method. 5.6.1.6 Updated Argument, Note of CameraCentering method. 5.6.1.10 Updated Argument of CameraWiperControl method. 5.6.3.1 Updated Argument of OnOpStatus Listener. 5.7.1.1 Updated Argument of AlmOperation method. 5.7.3.1 Updated Argument of OnAlmStatus Listener. 5.8.1.1.Updated Argument, Note of FTPGet method.
11.40 R01	Jun.26, 2019	1.4 Updated Abbreviations. 2.2 Updated Development Environment. 5.4.2.7 Updated Value of H264Resolution property. 5.4.2.8 Updated Value of JPEGResolution property. 5.6.1.1 Updated Note of CameraControl method. 5.6.1.2 Updated Note of SetCameraPosition method. 5.6.1.4 Updated Note of CameraOperaton method. 5.6.1.6 Updated Note of CameraCentering method. 7 Updated error code list.
11.60 R01	May.29, 2020	Change company name. 2.1 Updated System Environment. 4.3 Updated Restrictions of the usage when using the shared UID. 5.2.2.16 Added SecureCommunicationMode property. 5.4.2.53 Added TransIntervalMode property. 5.4.2.54 Added DecBufferNum property. 5.6.1.4 Updated Note of CameraOperaton method. 6.17 Added Operation Procedure, Sequence of SSL. 7 Updated error code list.

Version	Revised Date	Content of Revision
12.00 R01	May.31, 2021	1.5 Updated Structures of PS-API. 1.6 Updated Overview of functions. 1.7 Updated Function List. 1.8 Updated Compatible chart by models. 4.7 Updated the description of 360-degree network camera. 5.1.1.1 Updated IPSAPI. 5.2.2.16 Updated Note for SecureCommunicationMode property. 5.3.1.12. Updated Note of SetCameraTime method 5.4.1.3 Updated Note of Play method. 5.4.1.45. Added HttpDownload method. 5.4.1.46. Updated Description of GetMP4DownloadStatus method. 5.4.1.47. Updated Description of GetMP4DownloadTransRate method. 5.4.2.7 Updated Value of H264Resolution property. 5.4.2.8 Updated Value of JPEGResolution property. 5.4.3.5. Updated Description of OnMP4DownloadStatus Event. 5.6.1.4 Updated Argument of CameraOperaton method. 5.6.1.9 Updated Argument of SetCameraImageCap method. 5.7.1.1. Updated Argument , note of AlarmOperation method 7 Updated error code list.
12.10 R01	Aug.31, 2021	5.3.1.12. Updated Note of SetCameraTime method 5.4.2.16. Updated Note of InternetMode property
12.30 R01	Jan.31, 2022	4.7 Updated the description of 360-degree network camera. 5.3.1.12. Updated Note of SetCameraTime method 5.4.2.7 Updated Value of H264Resolution property. 5.4.2.8 Updated Value of JPEGResolution property. 5.6.1.4 Updated Argument of CameraOperation method. 5.8.1.1 Updated Description of FTPGet method. 7 Updated error code list.
12.50 R01	Apr.1, 2022	Change company name. 2.1 Added Microsoft® Windows® 11 Pro and Windows Server® 2019 Standard to System Environment. 5.2.2.2 Updated Note of IPAddr 5.2.2.16 Updated Note of SecureCommunicationMode property. 5.3.1.12. Updated Note of SetCameraTime method 5.4.1.2 Updated Argument of PlayLive method. 5.4.1.35 Updated Argument of CamSnapShot method. 5.6.1.1 Updated Argument, Note of CameraControl method. 5.6.1.4 Updated Argument of CameraOperation method. 5.8.1.1 Updated Description of FTPGet method. 6.18 Added Operation Procedure,Sequence of MultiPlayLive_SID.
12.70 R01	Jun.30, 2022	4.3 Updated Restrictions of the usage when using the shared UID. 5.3.1.12. Updated Note of SetCameraTime method 5.6.1.1 Updated Note of CameraControl method. 5.6.1.2 Updated Note of SetCameraPosition method. 5.6.1.4 Updated Argument , Note of CameraOperaton method. 5.6.1.6 Updated Note of CameraCentering method.
12.80 R01	Sep.30, 2022	2.1 Added Microsoft® Windows Server® 2022 Standard to System Environment. 2.1 Deleted Microsoft® Windows® 8 Pro from System Environment. 5.5.1.1. Updated Note of AudioSend method. 5.5.2.1 Updated Note of AudioRcvEnable property.

Version	Revised Date	Content of Revision
12.90 R01	Dec.9, 2022	1.4. Updated abbreviation. Added NU series to NX seriesNX series NU series 3.5 Updated Restrictions. 4.1 Updated Connect to the device. 4.7.2 Updated The explanation if image capture mode of 360-degree network camera. 5.2.1.1 Updated Sequence of Open method. 5.2.2.1 Updated Argument of DeviceType property. 5.2.2.8. Updated Argument of UID property. 5.2.2.11 Updated Note of UIDInfoMax property. 5.2.2.14 Updated Note of SIDInfoMax property. 5.3.1.1 Updated Argument of GetDeviceStatus method. 5.3.1.3 Updated Argument of GetRecStatus method. 5.3.1.4 Updated Argument of Search method. 5.3.1.5 Updated Argument of SearchEx method. 5.3.1.6 Updated Argument of VMDSearchEx method. 5.3.1.13 Updated Description of GetStatisticsData method. 5.3.3.1 Updated Argument of OnDevStatus Listener. 5.3.3.2 Updated Argument of OnRecStatus Listener. 5.4.1.2 Updated Argument of PlayLive method. 5.4.1.3 Updated Argument of Play method. 5.4.1.5 Updated Note of PlayControl method. 5.4.1.8 Updated Note of GetPlaySpeed method. 5.4.1.11 Updated Note of GetImageResolution. 5.4.1.44 Updated Argument of HttpMP4Download method. 5.4.1.45 Updated Argument of HttpDownload method. 5.4.2.16 Updated Note of InternetMode property. 5.4.2.17 Updated Note of FastPlayMode property. 5.4.2.34 Updated Note of RcvAudioDec property. 5.4.3.1 Updated Argument of OnPlayStatus Event. 5.5.2.1 Updated Note of AudioRcvEnable property. 5.6.1.1 Updated Argument, Note of CameraControl method. 5.6.1.4 Updated Argument of CameraOperation method. 5.6.1.5 Updated Argument of GetCameraOperationStatus method. 5.6.1.6 Updated Argument, Note of CameraCentering method. 5.6.1.10 Updated Argument of CameraWiperControl method. 5.6.3.1 Updated Argument of OnOpStatus Listener. 5.7.1.1 Updated Argument of AlmOperation method. 5.7.3.1 Updated Argument of OnAlmStatus Listener.
13.00 R01	Mar.10, 2023	5.2.2.16 Updated Note of SecureCommunicationMode property. 5.4.1.2 Updated Argument of PlayLive method. 5.4.1.7 Updated Return Value of GetPlayStatus method. 5.4.1.35 Updated Argument of CamSnapShot method. 5.4.3.1 Updated Argument of OnPlayStatus Listener. 5.4.3.4 Updated Argument of OnPlayStatusCB Listener. 5.6.1.1 Updated Argument, Note of CameraControl method. 5.6.1.4 Updated Argument of CameraOperation method. 5.6.1.9 Updated Argument of SetCameraImageCap method.

Version	Revised Date	Content of Revision
13.10 R01	Dec.20, 2023	Changed the notation from ActiveX to OCX. 3.5 Updated Restrictions. 4.1 Updated Connect to the device. 4.2 Connect to the device (Advanced usage for connection with recorder) 5.1.1.1 Updated PSAPI Control. 5.2.1.1 Updated Sequence of Open method. 5.2.1.7 Updated Note of GetLoginStatus method. 5.2.2.8. Updated Argument and Note of UID property. 5.2.2.9. Added UIDEx property. 5.2.2.18. Added CertificateVerifyEnable property. 5.2.2.11 Updated Note of UIDInfoMax property. 5.2.2.14 Updated Note of SIDInfoMax property. 5.3.1.1 Updated Argument of GetDeviceStatus method. 5.3.1.3 Updated Argument of GetRecStatus method. 5.3.1.4 Updated Argument and Note of Search method. 5.3.1.5 Updated Argument and Note of SearchEx method. 5.3.1.6 Updated Argument of VMDSearchEx method. 5.3.1.13 Updated Description of GetStatisticsData method. 5.3.3.1 Updated Argument of OnDevStatus Listener. 5.3.3.2 Updated Argument of OnRecStatus Listener. 5.4.1.2 Updated Argument of PlayLive method. 5.4.1.3 Updated Argument and Note of Play method. 5.4.1.5 Updated Note of PlayControl method. 5.4.1.8 Updated Note of GetPlaySpeed method. 5.4.1.44 Updated Argument of HttpMP4Download method. 5.4.1.45 Updated Argument of HttpDownload method. 5.4.2.15 Updated Note of NXStreamNumber property. 5.4.2.16 Updated Note of InternetMode property. 5.4.2.17 Updated Note of FastPlayMode property. 5.4.2.29 Updated Note of MultiScreenChannel property. 5.4.2.32 Updated Note of DecResolutionMode property. 5.4.3.1 Updated Argument of OnPlayStatus Event. 5.5.1.1. Updated Note of AudioSend method. 5.6.1.1 Updated Argument, Note of CameraControl method. 5.6.1.2 Updated Note of SetCameraPosition method. 5.6.1.4 Updated Argument of CameraOperation method. 5.6.1.5 Updated Argument of GetCameraOperationStatus method. 5.6.1.6 Updated Argument, Note of CameraCentering method. 5.6.1.10 Updated Argument of CameraWiperControl method. 5.6.3.1 Updated Argument of OnOpStatus Listener. 5.7.1.1 Updated Argument of AlmOperation method. 5.7.3.1 Updated Argument of OnAlmStatus Listener. 5.8.1.1 Updated Description of FTPGet method. 7 Updated error code list.

INDEX

1. Preface

1.1. What's PS-API

PS-API is the software which is provided to help to develop the application to control i-PRO Co., Ltd. made security products (Network cameras, Network Disk Recorders, Digital Disk Recorders, Network Interface Units) by the unified method and to get video image.

PS-API is provided as the OCX.

1.2. Trademarks and Registered Trademarks

Microsoft and Windows are registered trademarks of Microsoft Corporation in U.S. and/or other countries. Other names of companies and product contained in these operating instructions may be trademarks or registered trademarks of their respective owners.

1.3. Limitation of liability

- PS-API provides interfaces for the application software that controls i-PRO Co., Ltd. made security products (Network cameras, Network Disk Recorders, Digital Disk Recorders, Network Interface Units), and is not designed to protect against "theft" or "crime" independently.

- The provided sample programs are designed to instruct users how to use the SDK. They are not developed for the purpose of actual surveillance system.

- In not event shall i-PRO Co., Ltd. be liable to any party or any person, except for replacement or reasonable maintenance of the product, for the cases, including but not limited to below;

[1] Any damage and loss, including without limitation, direct or indirect, special, sequential or exemplary, arising out of or relating to the product;
[2] Personal injury or any damage caused by inappropriate use or neglect operation of the user;
[3] Any problems, consequential inconvenience, or loss or damage, arising out of the reverse compiling or reverse engineering of the product;
[4] Any loss or damage, or claims arising out from loss or leak of PS data including video data in the PC;
[5] Any claim or action for damages, brought by any person or organization being a photogenic subject, due to violation of privacy with the result of that surveillance camera's picture, including saved data, for some reason, becomes public or is used for the purpose other than surveillance;

1.4. Abbreviations

The following abbreviations are used in these operating instructions.
Microsoft® Visual Basic 2005 is described as Visual Basic 2005.
Microsoft® Visual C# 2005 is described as Visual C# 2005.
Microsoft® Visual Basic 2012 is described as Visual Basic 2012.
Microsoft® Visual C# 2012 is described as Visual C# 2012.

Network Camera is referred as Camera.
Camera models are listed only for representative models of the series
Please refer to [PS-API Supported Product List for English] document for camera series
Network Interface Unit is referred as Encoder.
Network Disk Recorder is referred as NWDR.
Network Disk Recorder (NX series, NU series) is referred as NX series.
Digital Disk Recorder (HD300 series) is referred as HD300.
Digital Disk Recorder (HD600 series, HD700 series) is referred as HD600/700.

1.5. Structures of PS-API

Figure 1-1 shows the PS-API structures.

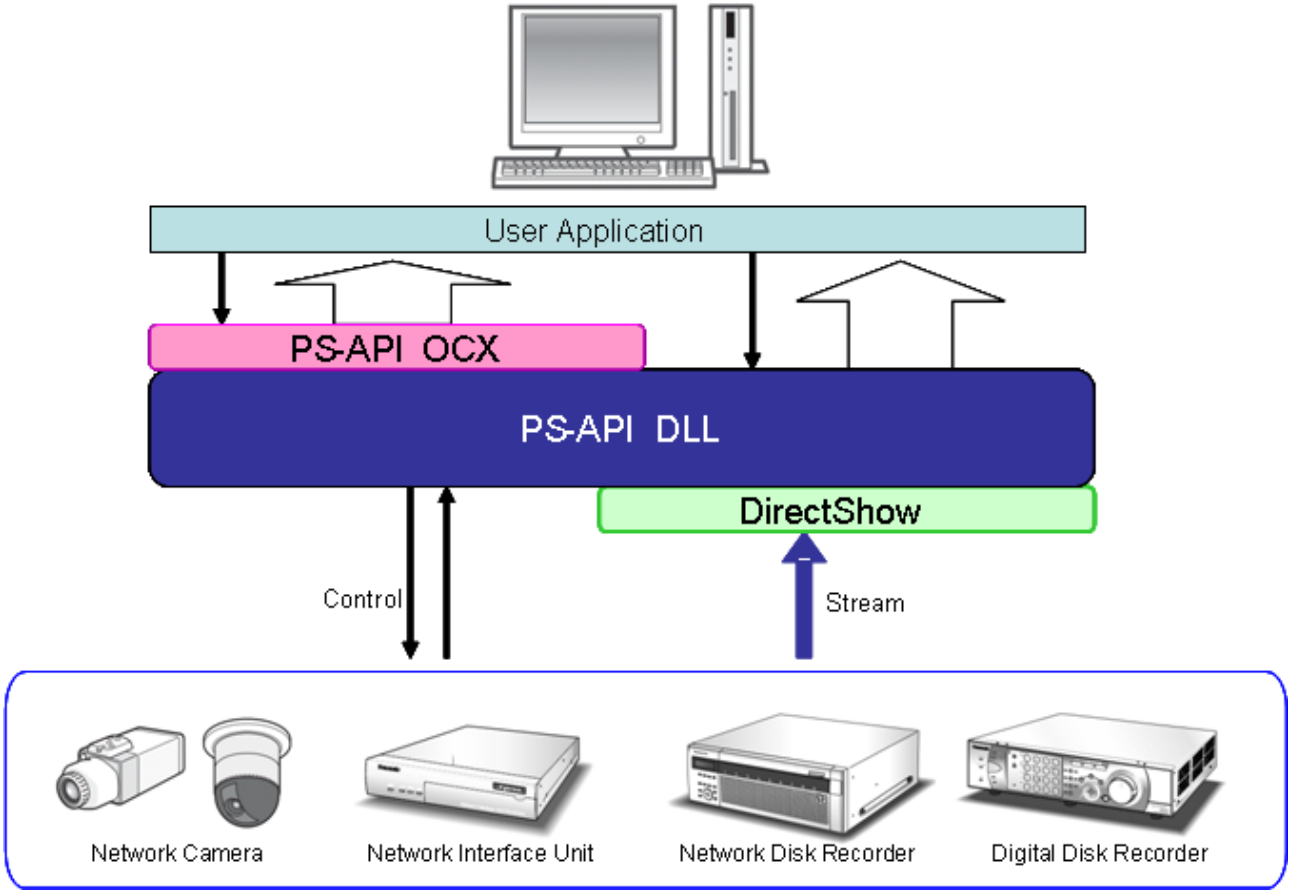

Figure 1-1 PS-API Structures

1.6. Overview of Functions

Table 1-1 shows the overview of functions.

Table 1-1 Function Overview

No.	Overview	Reference
1	Login / Logout	PS Builde Group
2	Search the recorded video data. (Network Disk Recorder, Digital Disk Recorder)	Device Group
3	Control recording. (Network Disk Recorder, Digital Disk Recorder)	
4	Display live image.	Video Group
5	Display playback image via network. (Network Disk Recorder, Digital Disk Recorder)	
6	Control playback such as Fast Forward and Rewind. (Network Disk Recorder, Digital Disk Recorder)	
7	Image recognition. (Only for supported devices)	
8	Digital zoom, Overlay	
9	Snap Shot	
10	MP4 or n3 file download(HTTP)	
11	Audio reception and transmission.	Audio Group
12	Control a camera. (Pan, Tilt, Zoom, Auto Back Focus functions, Super Dynamic function, etc)	Operation Group
13	Control AUX (Camera and Encoder)	
14	Control alarms.	Alarm Group
15	FTP download	FTP Group
16	Notify the event of Mouse operation.	MouseEvent Group

1.7. Function List

Table 1-2 shows the functions provided in this PS-API.

Table 1-2 List of Functions

Method

No.	Object	Method	Overview	Reference
PS Builder Group				
1	PSAPI Control	Open	Log in to the device, and get UID.	
2	PSAPI Control	Connect	Connect to the device with the specified UID which other instance got by the login.	
3	PSAPI Control	Close	Stop the HTTP connection, and log out from the device.	
4	PSAPI Control	Disconnect	Stop the HTTP connection.	
5	PSAPI Control	ClearWaitingFunc	Cancel the waiting function of async type method.	
6	PSAPI Control	GetWaitingFuncCount	Get the waiting function of async type method count.	
7	PSAPI Control	GetLoginStatus	Get login result. If login failure, the reason of failure returns.	
8	PSAPI Control	GetUIDInfo	Get the maximum number of UID that recorder can issue and the number of UID which is in use.	
9	PSAPI Control	GetSIDInfo	Get the information of StreamID support, the maximum number of StreamID that recorder can issue, and the number of StreamID which is in use.	

No.	Object	Method	Overview	Reference
Device Group				
1	PSAPI Control	GetDeviceStatus	Get the device status.	
2	PSAPI Control	RecCtrl	Turn on and off the manual recording.	
3	PSAPI Control	GetRecCtrlStatus	Get recording status.	
4	PSAPI Control	Search	Search the recording event. Time zone information is NOT included in search results.	
5	PSAPI Control	SearchEx	Search the recording event. Time zone information is included in search results.	
6	PSAPI Control	VmdSearchEx	Do VMD search.	
7	PSAPI Control	SearchCancel	Cancel the executing Search/SearchEx/VmdSearchEx function.	
8	PSAPI Control	GetDeviceLog	Get the recording device logs.	
9	PSAPI Control	GetDevTimeZone	Get time zone information and summer time In/Out time table.	
10	PSAPI Control	GetDevCurrentInfo	Get the device information and hold it.	
11	PSAPI Control	GetInfoString	Get a value from the kept information that was gotten by GetDevCurrentInfo method.	
12	PSAPI Control	SetCameraTime	Set specified time to a target device.	
13	PSAPI Control	GetStatisticsData	Get statistics data from NV200 ,NV250 ,NV300 and NX Series.	
14	PSAPI Control	SetUIDPriority	Change the UID priority mode of ND400, NV200,NV250,NV300, NX Series and HD600/700.	

No.	Object	Method	Overview	Reference
Video Group				
1	PSAPI Control	GetFrameTime	Get the frame time and date of the recorded video play.	
2	PSAPI Control	PlayLive	Start live video play.	
3	PSAPI Control	Play	Start recorded video play.	
4	PSAPI Control	PlayFile	Start video play from a specified video file.	
5	PSAPI Control	PlayControl	Control video play. that was started by PlayLive/Play/PlayFile method (Forward, Pause, etc)	
6	PSAPI Control	PlayControlByTime	Jump to the specified date and time,	
7	PSAPI Control	GetPlayStatus	Get current video play status.	
8	PSAPI Control	GetPlaySpeed	Get current video play speed.	
9	PSAPI Control	GetFrameRate	Get current playing video stream frame rate.	
10	PSAPI Control	GetPicturePosition	Get the position of the displayed picture except black panels.	
11	PSAPI Control	GetImageResolution	Get the displayed image resolution.	
12	PSAPI Control	ClearImage	Clear the image that is displayed on the screen.	
13	PSAPI Control	SaveJpegImage	Store the displayed image in a jpeg format file.	
14	PSAPI Control	GetJpegImage	Get the displayed image with jpeg format.	
15	PSAPI Control	SaveBitmapImage	Store the displayed image in a bitmap format file.	
16	PSAPI Control	GetBitmapImage	Get the displayed image with bitmap format.	
17	PSAPI Control	TitleOperation	Draw text strings on the displayed image.	
18	PSAPI Control	TitleOperationEx	Draw text strings on the displayed image. (with transmissivity)	
19	PSAPI Control	GetTitle	Get the text strings that is displayed on the video image by using TitleOperation.	
20	PSAPI Control	BoxOperation	Display frame lines on the video image.	
21	PSAPI Control	BoxOperationEx	Display frame lines on the video image. (with transmissivity)	
22	PSAPI Control	BitmapOperationEx	Display bitmap image on the video image. (with transmissivity)	

No.	Object	Method	Overview	Reference
23	PSAPI Control	DigitalZoomMove	Move the displayed area during working a digital zoom.	
24	PSAPI Control	GetDigitalZoomPosition	Get the current position of the displayed area in the original image with digital zoom.	
25	PSAPI Control	MultiSyncPause	When using PlayControl with multi screen, pause to synchronize with other screen.	
26	PSAPI Control	MultiSyncTime	When using PlayControl with multi screen, set the sync time to synchronize with other screen.	
27	PSAPI Control	CamSnapShot	Get the snapshot image from NW camera or Encoder, and display it.	
28	PSAPI Control	SetCroppingRect	Set the Cropping Position.	
29	PSAPI Control	GetCroppingRect	Get the Cropping Position.	
30	PSAPI Control	SetCroppingDrawRect	Set the Draw Position in Cropping function.	
31	PSAPI Control	GetCroppingDrawRect	Get the Draw Position in Cropping function.	
32	PSAPI Control	SetCroppingDrawEnabled	Set Hide/Show each id of Cropping function.	
33	PSAPI Control	GetCroppingDrawEnabled	Get Hide/Show each id of Cropping function.	
34	PSAPI Control	SetCroppingMarker	Set the Marker that indicate the Cropping Position.	
35	PSAPI Control	GetCroppingMarker	Get the Marker that indicate the Cropping Position.	
36	PSAPI Control	HttpMP4Download	Download the MP4 file via HTTP from a NX Series.	
37	PSAPI Control	HttpDownload	Download the MP4 or n3 file via HTTP from a NX Series.	
38	PSAPI Control	GetMP4DownloadStatus	Get MP4 or n3 file downloading status.	
39	PSAPI Control	GetMP4DownloadtransRate	Get transfer speed in MP4 or n3 file downloading.	
40	PSAPI Control	SetMP4DownloadListener	Register OnMP4DownloadStatus Listener function for an application.	

No.	Object	Method	Overview	Reference
Audio Group				
1	PSAPI Control	AudioSend	Start or Stop the audio transmission.	
2	PSAPI Control	GetAudioSendStatus	Get the audio transmission status.	
Operation Group				
1	PSAPI Control	CameraControl	Send Pan, Tilt, Focus, Zoom, Iris command to the specified camera.	
2	PSAPI Control	SetCameraPosition	Set Pan, Tilt, Zoom and Focus values in absolute angle.	
3	PSAPI Control	GetCameraPosition	Get Pan, Tilt, Zoom and Focus values in absolute angle.	
4	PSAPI Control	CameraOperation	Operate camera such as auto track, auto pan, auto focus.	
5	PSAPI Control	SetOpListener	Register OnOpStatus Listener function for an application.	
6	PSAPI Control	CameraCentering	Control the camera to the specified position becomes the center.	
7	PSAPI Control	CameraAuxControl	Control the AUX terminal of camera and encoder to OPEN/CLOSE.	
8	PSAPI Control	GetCameraAuxStatus	Get AUX terminal status of camera and encoder.	
9	PSAPI Control	SetCameraImageCap	Set a Image capture mode and installation of camera.	
10	PSAPI Control	CameraWiperControl	Operate camera wiper function.	
Alarm Group				
1	PSAPI Control	AlmOperation	Reset current device alarm state. Or trigger a device alarm by the application.	
2	PSAPI Control	GetAlarmStatus	Get current alarm information.	

No.	Object	Method	Overview	Reference
FTP Group				
1	PSAPI Control	FtpGet	Download the video/ audio/ recording event list via FTP from a recording device.	
2	PSAPI Control	FtpCancel	Cancel FTP download.	
3	PSAPI Control	FtpServerClose	Turn off the FTP server mode on a target device.	
4	PSAPI Control	GetFtpStatus	Get Ftp downloading status.	
5	PSAPI Control	GetFtpTransRate	Get transfer speed in FTP downloading.	
6	PSAPI Control	GetFtpTransByte	Get transferred byte count in FTP downloading.	

Event

No.	Object	Event	Overview	Reference
PS Builder Group				
1	PSAPI Control	OnError	The OnError notification function is to pass error code from PS-API to the application.	
Device Group				
1	PSAPI Control	OnDevStatus	The OnDevStatus notification function is to pass device connection status between recorder and camera from PS-API to the application.	
2	PSAPI Control	OnRecStatus	The OnRecStatus notification function is to pass Recorder status from PS-API to the application.	
3	PSAPI Control	OnRecStatusCB	The Recording control callback function is to pass application recording control result from PS-API to the application.	
4	PSAPI Control	OnSearchCB	The Search callback function is to send the notification from PS-API to the application when the search finishes.	
5	PSAPI Control	OnSearchExCB	The SearchEx / VMDSearcj callback function is to send the notification from PS-API to the application when the search finishes.	
Video Group				
1	PSAPI Control	OnPlayStatus	The OnPlayStatus notification function is to pass play status from PS-API to the application.	
2	PSAPI Control	OnRecoedStatus	The OnRecordStatus notification function is to pass the recording data status (beginning or the ending) from PS-API to a specified application.	
3	PSAPI Control	OnImageRefresh	The OnImageRefresh notification function is to pass image data with specified type from PS-API to the application.	
4	PSAPI Control	OnPlayStatusCB	The play status callback function is to pass video play status from PS-API to the application.	

No.	Object	Event	Overview	Reference
Video Group				
5	PSAPI Control	OnMP4DownloadStatus	The OnMP4DownloadStatus notification function is to pass file downloading status change from PS-API to a specified application.	

No.	Object	Event	Overview	Reference
Operation Group				
1	PSAPI Control	OnOpStatus	The OnOpStatus notification function is to pass camera operation status from PS-API to the application.	
2	PSAPI Control	OnOpStatusCB	The operation status callback function is to pass camera operation status from PS-API to the application request.	
Alarm Group				
1	PSAPI Control	OnAlmStatus	The alarm status change notification function is to pass alarm status from PS-API to the application.	
2	PSAPI Control	OnAlmStatusCB	The alarm status callback function is to pass alarm operation state from PS-API to the application request.	
FTP Group				
1	PSAPI Control	OnFtpStatusCB	The FTP status callback function is to pass FtpGet state from PS-API to a specified application request.	
MouseEvent Group				
1	PSAPI Control	MouseDown	This event occurs when the mouse pointer is onto OCX control and the mouse button is down.	
2	PSAPI Control	MouseUp	This event occurs when the mouse pointer is onto OCX control and the mouse button is up.	
3	PSAPI Control	DblClick	This event occurs when the mouse pointer is onto OCX control and the mouse button is double clicked.	
4	PSAPI Control	MouseMove	This event occurs when the mouse pointer is onto OCX control and the mouse pointer is moved.	
5	PSAPI Control	MouseWheel	This event occurs when the mouse pointer is onto OCX control and the mouse wheel is scrolled.	

1.8. Compatible chart by models

The following list shows the compatible chart by models.

Table 1-3 Compatible Chart by Models

No.	Method	Camera	NWDR	HD300	HD600/700	Encoder	NX Series	Remarks
PS Builder Group								
1	Open	Yes	Yes	Yes	Yes	Yes	Yes	
2	Connect	Yes	Yes	Yes	Yes	Yes	Yes	
3	Close	Yes	Yes	Yes	Yes	Yes	Yes	
4	Disconnect	Yes	Yes	Yes	Yes	Yes	Yes	
5	ClearWaitingFunc	Yes	Yes	Yes	Yes	Yes	Yes	
6	GetWaitingFuncCount	Yes	Yes	Yes	Yes	Yes	Yes	
7	GetLoginStatus	Yes	Yes	Yes	Yes	Yes	Yes	
8	GetUIDInfo	Yes	Yes	Yes	Yes	Yes	Yes	
9	GetSIDInfo	Yes	Yes	Yes	Yes	Yes	Yes	
Device Group								
1	GetDeviceStatus	Yes	Yes	Yes	Yes	Yes	Yes	
2	RecCtrl	-	*1	Yes	Yes	-	—	
3	GetRecCtrlStatus	-	Yes	Yes	Yes	-	Yes	
4	Search	-	Yes	Yes	Yes	-	Yes	
5	SearchEx	-	Yes	Yes	Yes	-	Yes	
6	VmdSearchEx	-	*2	Yes	Yes	-	*2	
7	SearchCancel	-	Yes	Yes	Yes	-	Yes	
8	GetDeviceLog	-	Yes	Yes	Yes	-	Yes	
9	GetDevTimeZone	Yes	Yes	*3	Yes	Yes	Yes	
10	GetDevCurrentInfo	Yes	Yes	Yes	Yes	Yes	Yes	
11	GetInfoString	Yes	Yes	Yes	Yes	Yes	Yes	
12	SetCameraTime	Yes	-	-	-	Yes	—	
13	GetStatisticsData	—	*12	—	—	—	Yes	
14	SetUIDPriority	—	*13	—	Yes	—	Yes	

No.	Method	Camera	NWDR	HD300	HD600/700	Encoder	NX Series	remarks
Video Group								
1	GetFrameTime	*4	*5	*6	Yes	Yes	Yes	
2	PlayLive	Yes	Yes	Yes	Yes	Yes	Yes	
3	Play	-	Yes	Yes	Yes	-	Yes	
4	PlayFile	—	—	—	—	—	—	
5	PlayControl	Yes	Yes	*7	Yes	Yes	Yes	
6	PlayControlByTime	-	Yes	Yes	Yes	-	Yes	
7	GetPlayStatus	Yes	Yes	Yes	Yes	Yes	Yes	
8	GetPlaySpeed	Yes	Yes	Yes	Yes	Yes	Yes	
9	GetFrameRate	*8	*9	*8	*8	*8	*9	
10	GetPicturePosition	Yes	Yes	Yes	Yes	Yes	Yes	
11	GetImageResolution	Yes	Yes	Yes	Yes	Yes	Yes	
12	ClearImage	—	—	—	—	—	—	
13	SaveJpegImage	Yes	Yes	Yes	Yes	Yes	Yes	
14	GetJpegImage	Yes	Yes	Yes	Yes	Yes	Yes	
15	SaveBitmapImage	Yes	Yes	Yes	Yes	Yes	Yes	
16	GetBitmapImage	Yes	Yes	Yes	Yes	Yes	Yes	
17	TitleOperation	Yes	Yes	Yes	Yes	Yes	Yes	
18	TitleOperationEx	Yes	Yes	Yes	Yes	Yes	Yes	
19	GetTitle	Yes	Yes	Yes	Yes	Yes	Yes	
20	BoxOperation	Yes	Yes	Yes	Yes	Yes	Yes	
21	BoxOperationEx	Yes	Yes	Yes	Yes	Yes	Yes	
22	BitmapOperationEx	Yes	Yes	Yes	Yes	Yes	Yes	
23	DigitalZoomMove	Yes	Yes	Yes	Yes	Yes	Yes	
24	GetDigitalZoomPosition	Yes	Yes	Yes	Yes	Yes	Yes	
25	MultiSyncPause	-	Yes	-	Yes	-	Yes	
26	MultiSyncTime	-	Yes	-	Yes	-	Yes	
27	CamSnapShot	Yes	-	-	-	Yes	-	
28	SetCroppingRect	Yes	Yes	Yes	Yes	Yes	Yes	
29	GetCroppingRect	Yes	Yes	Yes	Yes	Yes	Yes	
30	SetCroppingDrawRect	Yes	Yes	Yes	Yes	Yes	Yes	
31	GetCroppingDrawRect	Yes	Yes	Yes	Yes	Yes	Yes	
32	SetCroppingDrawEnabled	Yes	Yes	Yes	Yes	Yes	Yes	
33	GetCroppingDrawEnabled	Yes	Yes	Yes	Yes	Yes	Yes	
34	SetCroppingMarker	Yes	Yes	Yes	Yes	Yes	Yes	
35	GetCroppingMarker	Yes	Yes	Yes	Yes	Yes	Yes	
36	HttpMP4Download	-	-	-	-	-	Yes	
37	HttpDownload	-	-	-	-	-	Yes	
38	GetMP4DownloadStatus	-	-	-	-	-	Yes	
39	GetMP4DownloadTransRate	-	-	-	-	-	Yes	
Audio Group								
1	AudioSend	Yes	-	-	-	Yes	-	
2	GetAudioSendStatus	Yes	-	-	-	Yes	-	

No.	Method	Camera	NWDR	HD300	HD600/700	Encoder	NX Series	remarks
Operation Group								
1	CameraControl	*10	*10	*10	*10	*10	*10	
2	SetCameraPosition	*10	-	-	-	-	-	
3	GetCameraPosition	*10	-	-	-	-	-	
4	CameraOperation	*10	*10	*10	*10	*10	*10	
5	GetCameraOperationStatus	*10	*10	*10	*10	*10	*10	
6	CameraCentering	Yes	-	-	-	Yes	*10	
7	CameraAuxControl	*10	-	-	-	*10	-	
8	GetCameraAuxStatus	*10	*10	*10	*10	*10	-	
9	SetCameraImageCap	*14	—	—	—	—	-	
10	CameraWiperControl	*15	*15	—	—	—	*15	
Alarm Group								
1	AlarmOperation	*11	Yes	*11	Yes	*11	Yes	
2	GetAlarmStatus	Yes	Yes	Yes	Yes	Yes	Yes	
FTP Group								
1	FtpGet	-	Yes	Yes	Yes	-	Yes	
2	FtpCancel	-	Yes	Yes	Yes	-	Yes	
3	FtpServerClose	-	Yes	Yes	Yes	-	Yes	
4	GetFtpStatus	-	Yes	Yes	Yes	-	Yes	
5	GetFtpTransRate	-	Yes	Yes	Yes	-	Yes	
6	GetFtpTransByte	-	Yes	Yes	Yes	-	Yes	

*1 : NV200 , NV250 and NV300is not supported.
*2 : ND200 and ND300 are not supported.
*3 : In case of HD300, time zone information cannot be got and is set to "0".
*4 : NP1000 is not supported.
*5 : In case that the target device is ND200, time zone depends on the device's time zone.
And in case that the target device is ND300 or ND400, time zone depends on the connected camera's time zone
*6 : Time zone cannot be got and is set to "0".
*7 : In case of network playback, to specify playback speed directly is not supported for HD300.
*8 : In case of PlayLive, frame rate cannot be got and is set to "0".
*9 : In case of MPEG-4/H.264/H.265(not JPEG), frame rate cannot be got and is set to "0" or "300".
*10 : Depends on models whether PTZ, Preset, Auto back focus, Super Dynamic, AUX control, preset sequence, auto sort and patrol are supported or not.
*11 : Can specify No-operation and Reset control only.
*12 : When NVF20,NVF30 is available, the function of statistics download works.
*13 : Only ND400 , NV200 , NV250 and NV300 is supported.
*14 : Only 360-degree Network Camera (SF438 series, SW458 series, SF448 series, SFV481 series, S4550 series, X4571 series, S4551 series, X4573 series) is supported.
*15 : SUD638 is only supported.

2. System requirements

2.1. System Environment

The following table shows the PC specification that is needed for installing PS-API.

Table 2-1 OS

OS	Microsoft® Windows® 7 Professional SP1 32 bit Edition(*6)
	Microsoft® Windows® 7 Professional SP1 64 bit Edition(*6)
	Microsoft® Windows® 8.1 Pro 32 bit Edition(*3)
	Microsoft® Windows® 8.1 Pro 64 bit Edition(*3)
	Microsoft® Windows® 10 Pro 32 bit Edition
	Microsoft® Windows® 10 Pro 64 bit Edition
	Microsoft® Windows® 11 Pro
	Microsoft® Windows Server® 2008 R2 Standard SP1 (*1)(*2)(*6)
	Microsoft® Windows Server® 2008 R2 Enterprise SP1 (*1)(*2)(*6)
	Microsoft® Windows Server® 2012 Standard(*1) (*2)
	Microsoft® Windows Server® 2012 R2 Standard(*1) (*2)
	Microsoft® Windows Server® 2016 Standard(Desktop Experience) (*1)
	Microsoft® Windows Server® 2019 Standard(Desktop Experience) (*1)
	Microsoft® Windows Server® 2022 Standard(Desktop Experience) (*1)

Table 2-2 Minimum System requirements

Processor(*4)	Intel® Core™2 Quad 2.66GHz or more
Memory(*4)	2.0GB or more
Hard drive	10GB or more
LAN	100Mbps or more

Table 2-3 Recommended system requirements

Processor(*4)	Intel® Core™i7-4790
Memory(*4)	8.0GB or more(*5)
Hard drive	10GB or more
LAN	100Mbps or more

(*1) "GetJpegImage" method and "GetBitmapImage" method does not work.
(*2) When using PS-API, it is necessary to install "Desktop Experience" to use Direct Show Filter functions.
(*3) Modern UI is not supported.
(*4) Requirement spec depends on the screen number and the video setting. When using for the multiple screen application and/or retrieving H.264/H.265 video image, please use PS-API with the recommended system requirements. In case of H.264/H.265 video streaming, you may be able to display mode video streams by the PS-API settings which DecResolutionMode is set to 3 and the value of H264Resolution is reduced.
(*5) Please use two same Memorys that dual-channel supported.
(*6) Windows® Internet Explorer® 11 or later is recommended.

2.2. Development Environment

The following table shows the development environment list that is supported by PS-API OCX.

Table 2-4 Development Environment

Target	Development Tool
PS-API OCX	Visual Basic 2005 SP1
	Visual C# 2005 SP1
	Visual Basic 2012
	Visual C# 2012

2.3. Supported i-PRO Products

Please refer to [**PS-API Supported Product List for English**] document.

3. Setup

3.1. Product

Please refer to [**PS-API Installation Guide for OCX**] document.

Table 3-1 The Overview of Files

[OCX folder]

Directory Name	Objective
PS-API¥ Redistributable	OCX files/DLL files Redistributable.
PS-API¥ Setup	Installer for OCX control and DirectShow filters. For development. **NOT REDISTRIBUTABLE.**
PS-API¥ Tool	Test tool. By using this tool, you can confirm connecting to a target device with PS-API. **NOT REDISTRIBUTABLE.**
PS-API¥ Document	The users manual. (This document) **NOT REDISTRIBUTABLE.**

Directory Name	Objective
PS-ALARM¥ Redistributable	OCX files/DLL files Redistributable.
PS-ALARM¥ Document	The users manual. **NOT REDISTRIBUTABLE.**

Directory Name	Objective
PS-LOOKUP¥ Redistributable	OCX files/DLL files Redistributable.
PS-LOOKUP¥ Document	The users manual. **NOT REDISTRIBUTABLE.**

[OCX-Sample folder]

Directory Name	Objective
Sample Program	Sample Programs. **NOT REDISTRIBUTABLE.**

3.2. Install

Please refer to [**PS-API Installation Guide for OCX**] document.

3.3. UnInstall

Please refer to [**PS-API Installation Guide for OCX**] document.

3.4. Control name and Class ID

The following information are Control name and Class ID of PS-API.

Control name	:	ipropsapiCtrl
Class ID (CLSID)	:	69ADBDBE-2035-4144-B52E-14753EB07CE9

3.5. Restrictions

(1) Do not use the Power Schemes or System Standby mode of WIndows®.

(2) PS-API instance is NOT thread safe.

(3) PS-API controls the Digital Disk Recorder/Network Disk Recorder with a UID provided from the Digital Disk Recorder/Network Disk Recorder. The maximum number of provided UIDs is shown on the following table.

Recorder	Maximum UID number
HD300	8
ND200	4
ND300	8
ND400	16
NV200 (*1)	4
NV250 (*1)	4
NV300(*1)	8
NX100(*1)	16
NX200(*1)	16
NX300(*1)	16
NX400(*1)	16
NX310(*1)	16
NX410(*1)	16
NX510(*1)	16
NU101(*1)	16
NU201(*1)	16
NU300/301(*1)	16
HD600/700	8

*1 : In case of NV200, NV250, NV300, NX Series up to 16 instances can work PlayLive/Play with the sharing UID at the same time.

Refer to "4.2 Connect to the device (Advanced usage for connection with recorder)" for further information about UID.

(4) In case of connection with Digital Disk Recorder/Network Disk Recorder, when 8 UIDs (in case of ND400 : 16 UIDs) are already used and a new user is going to get a UID, the priority of UID publication depends on the target device setting.

(5) When "ON" is selected for "User Authentication" on the Digital Disk Recorder/Network Disk Recorder, a user with a higher user level will have a priority to have a valid UID and a UID fiven for the instance of a user with a lower user level will be invalidated. (Refer to the operating instructions of the Digital Disk Recorder/Network Disk Recorder for further information about "User Authentication").

(6) The limitation of stream count that transmit live video from network camera or encoder is different between models or usage conditions. Regarding the details, please refer to CGI specification document of network camera.

(7) The audio reception supports G.726 and AAC. The audio transmission supports only G.726.

(8) In case of using multiple instances, please do not use AAC Format.

(9) The application that includes PS-API must be compiled by 32bit(x86) setting.

(10) Video delay may occur in the case of [resolution:2992*2992, frame rate:30ips] stream.
In that case, it may be improved with one of the following settings.

Proposal(1) Set the transmission priority of the camera to [VBR].
*When there is temporary large number of video changes, video delay occurs.
After that, when the video change decreases, the delay is gradually eliminated.

Proposal(2) Set the camera bit rate to 3.5Mbps or less.
*Please check the image delay and image quality and set appropriate values.

Proposal(3) please use the camera's frame rate "15ips(default)".

(11) [resolution: 2192x2192, frame rate:30ips] stream if it is displayed on 4K monitor, video delay may occur.In that case, it may be improved by adding a graphic board.
(*Operation confirmed graphic board: NVIDIA Quadro P600)

4. Overview of Library

4.1. Connect to the device

When the application connects to a network camera or a recorder by using PS-API, it is necessary that IP address, User name and Password are set first, and then Open() method is called.
(Refer to 5.2.1.1 Open.)
After execute Open() method, Application can use every method.

For HTTPS connection, set the SecureCommunicationMode, CertificateVerifyEnable and HttpPort properties, before executing the Open method..
(Refer to 5.2.2.17.SecureCommunicationMode, 5.2.2.18 CertificateVerifyEnable)

Notes on initial values of device
NW cameras and NX series have HTTP/HTTPS connection setting.
The initial value of many devices is "HTTP or HTTP&HTTPS", and HTTP connection is possible,
The initial value of NU recorder and NX310/NX410/NX510 is "HTTPS", so it will be HTTPS connection.
Set the SecureCommunicationMode property with PS-API according to the device settings.

Initial value of NU recorder

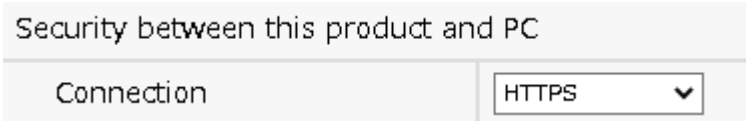

When stop connecting to the device, Application disconnects by using Close() method.
(Refer to 5.2.1.3 Close.)

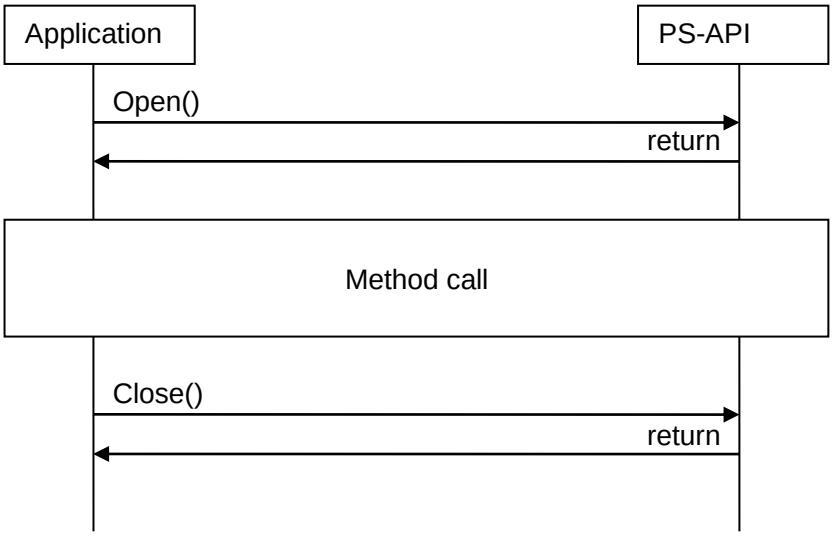

Figure 4-1 Connect to The Device

4.2. Connect to the device (Advanced usage for connection with recorder)

A recorder has the limitation of user connection count, and the connection count is managed by the count of UID that is delivered by a device.
When using Open() method, application gets one UID.
If you want to save the connection count (UID) when displaying multiple live images for plural channels, you can use Connect() method with one UID that one PS-API instance gets by using Open() method.
(Refer to 5.2.1.2 Connect.)
If stop the connection that is started by using Connect(), Application disconnects by using Disconnect() method.
(Refer to 5.2.1.4 Disconnect.)

NOTE
For NU101/NU201/NU300/NU301 and NX310/NX410/NX510, the return value of Open is an UID converted from UID inside PS-API. The converted UID can be used as an argument for the Connect() method.
To get the recorder's original UID, please use UIDEx() property.

NOTE
The following functions can work by using the shared UID. (*1) But when using the shared UID, there are some restrictions of the usage. Please refer to 4.3 Restrictions of the usage when using the shared UID .

(1) Live.
(2) FTP download
(3) Network playback
(4) MP4 or n3 file download via HTTP

*1 : In case of NV200, NV250, NV300, NX Series up to 16 instances can work PlayLive/Play with the sharing UID at the same time.
*2 : In case of sharing one UID, share within the same process.
If you want to start another process, get a new UID with the Open method

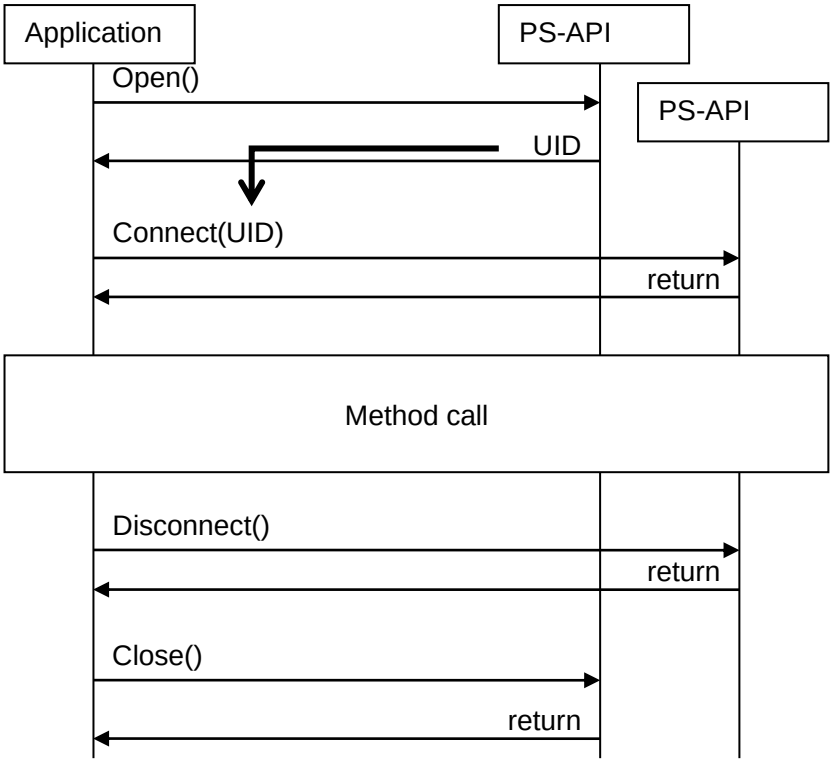

Figure 4-2 Connect to The Device (Advanced usage for connection with recorder)

4.3. Restrictions of the usage when using the shared UID

The instance that starts connection with Open() (hereafter referred as Instance-A) and the instance that starts connections with Connect() (hereafter referred as Instance-B) can be used for only Live, for only FTP download, for only MP4 or n3 file download via HTTP or for only network playback.

(1) Live

Case:

SIDMode property is 1, and Recoder that supports StreamID Mode

- On Instance-A and Instance-B, user can operate Live freely.

Case:

SIDMode property is 0, or Recorder that does not support StreatID Mode

- When using Instance-A for Live, Instance-B should be used for Live.
- When Instance-A and Instance-B share the same UID, they cannot show the same channel.

About StreamID Mode supported device or not is refer to [GetSIDInfo] method.

(2) FTP download

- When using Instance-A for FTP download, Instance-B should be used for FTP download.
- There is a limit to the number of the files which API can download at the same time.

(3) MP4 or n3 file download via HTTP

- When using Instance-A for file download, Instance-B cannot file download.

(4) Network playback

Case:

<u>SIDMode property is 1, and Recoder that supports StreamID Mode</u>

- On Instance-A and Instance-B, user can operate Network playback freely.

Case:

<u>SIDMode property is 0, or Recorder that does not support StreatID Mode</u>

- When using Instance-A for network playback and playback control, Instance-B should be used for network playback and playback control.
- Before starts network playback, please specify the channels that you want to start playback by using SetMultiChannelScreen(). This method should be called at one instance.
  If you call SetMultiChannelScreen() during network playback, unexpected result will be happen.
- When Instance-A and Instance-B share the same UID, they cannot show the same channel.
- When starts network playback with Play(), specify the same time and date to all instances that share UID.
- When starts playback control (Playback, Backward, Fast forward, Rewind) with PlayControl(), please calling MultiSyncPause method and MultiSyncTime method, and then specify the same operation to all instances that share UID. But PlayControl() cannot do Next frame, Previous frame, Next record, Previous record control.

About StreamID Mode supported device or not is refer to [GetSIDInfo] method.

[ND200 and ND300]

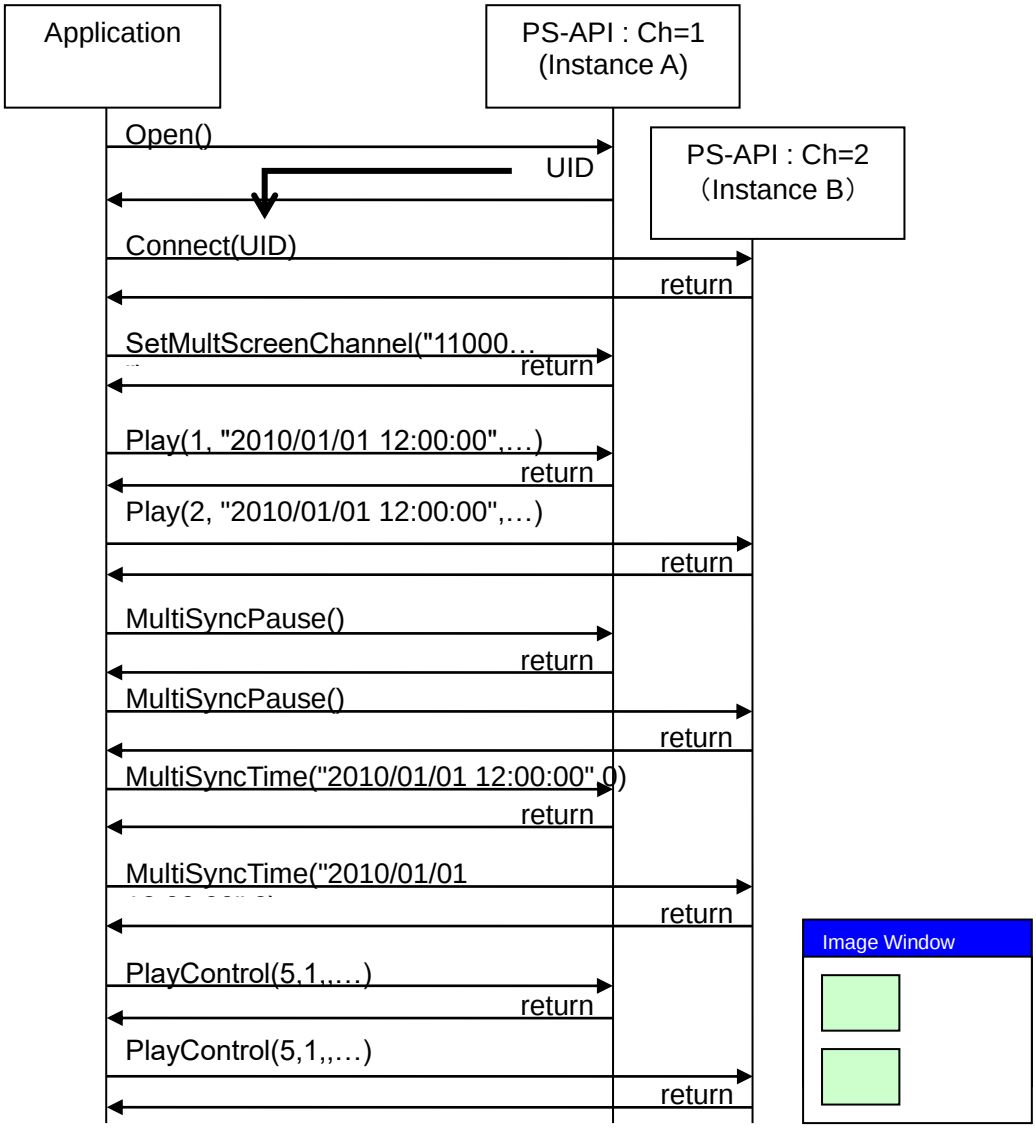

Figure 4-3 Start a playback with Multiple-Channel (Advanced usage for connection with recorder)

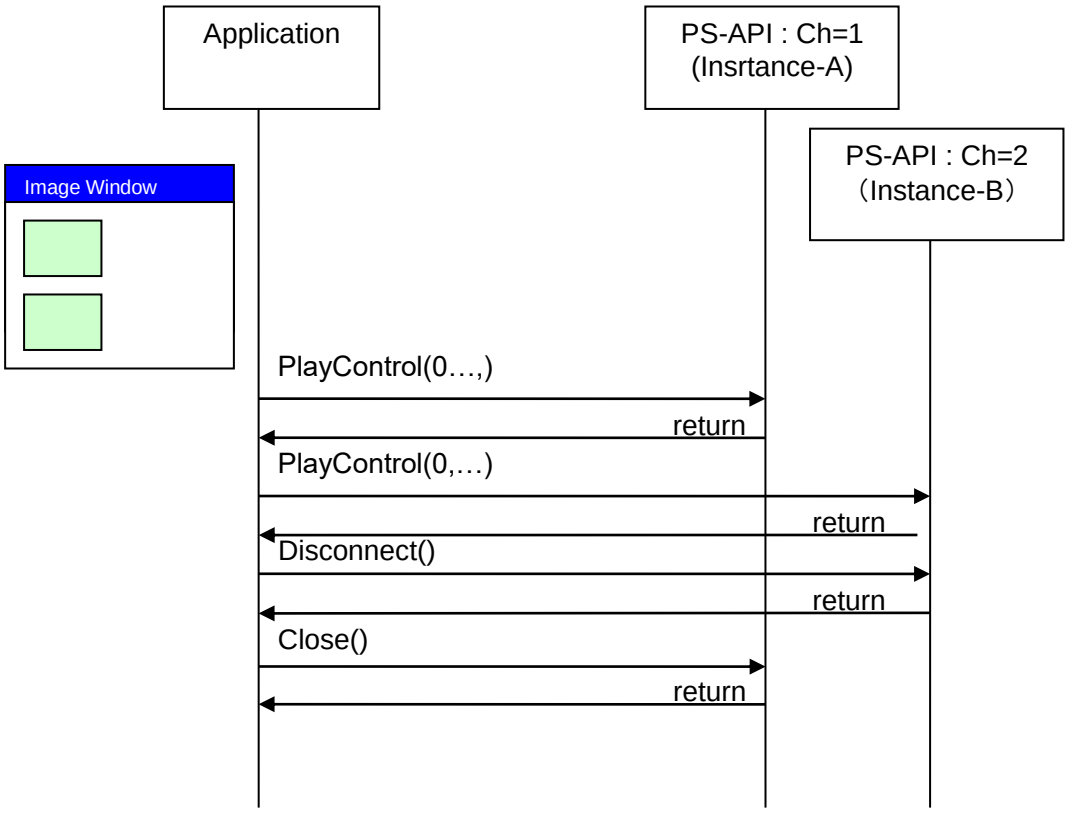

Figure 4-4　Stop a playback with Multiple-Channel (Advanced usage for connection with recorder)

4.4. Steps to control the device with PS-API

The following chart shows the flow that create instance, connect to device, register a window, start live, control PTZ and stop.

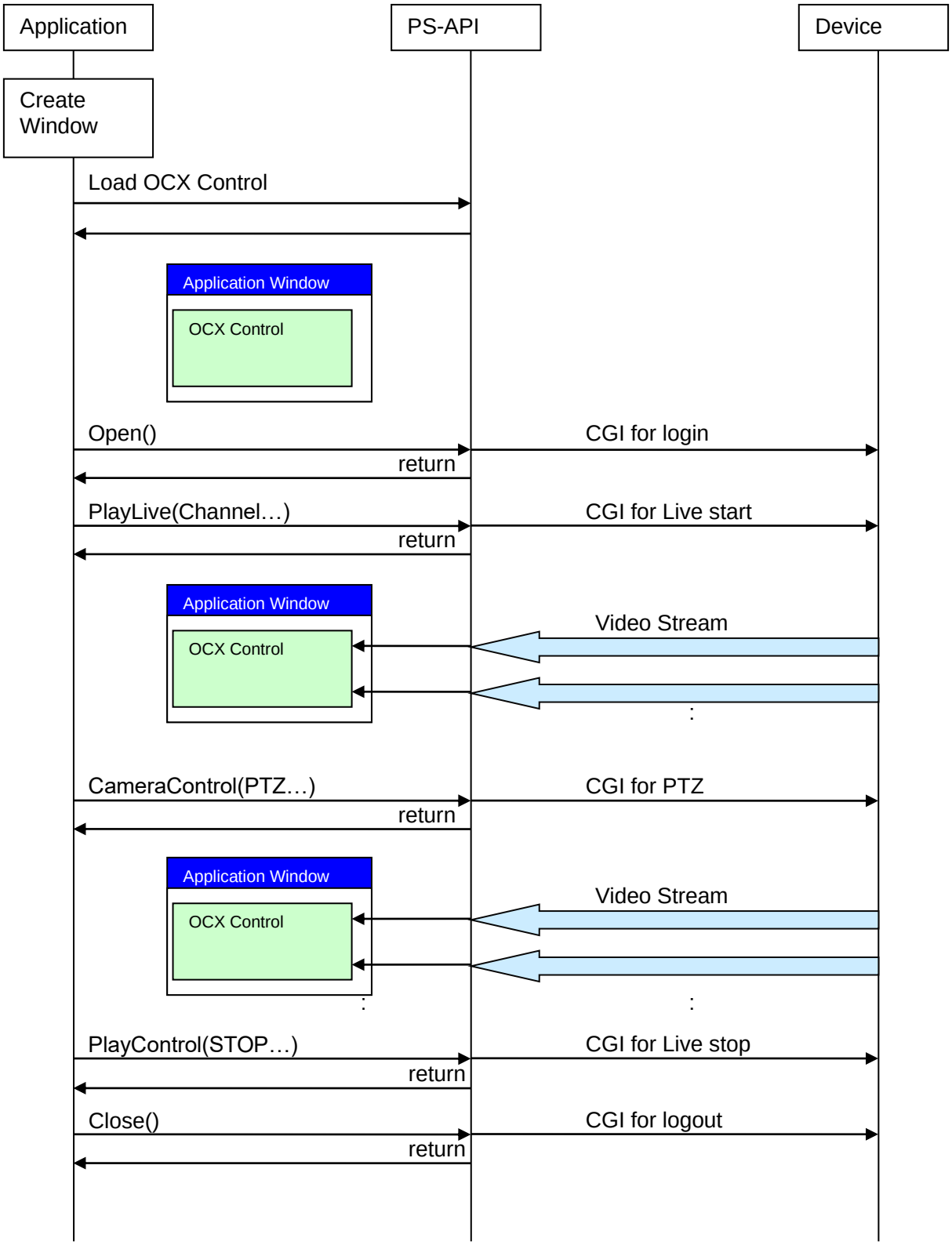

Figure 4-5 Steps to Control the Device with PS-API

4.5. Relationship between PS-API and Device

This chapter shows the relationship between PS-API and a device in case that an application connects to Network Camera or Recorder by using PS-API.

4.5.1. Display video images

One PS-API instance displays one video stream. The plural video streams cannot be displayed at the same time by using one PS-API instance.

- Connect to Network cameras

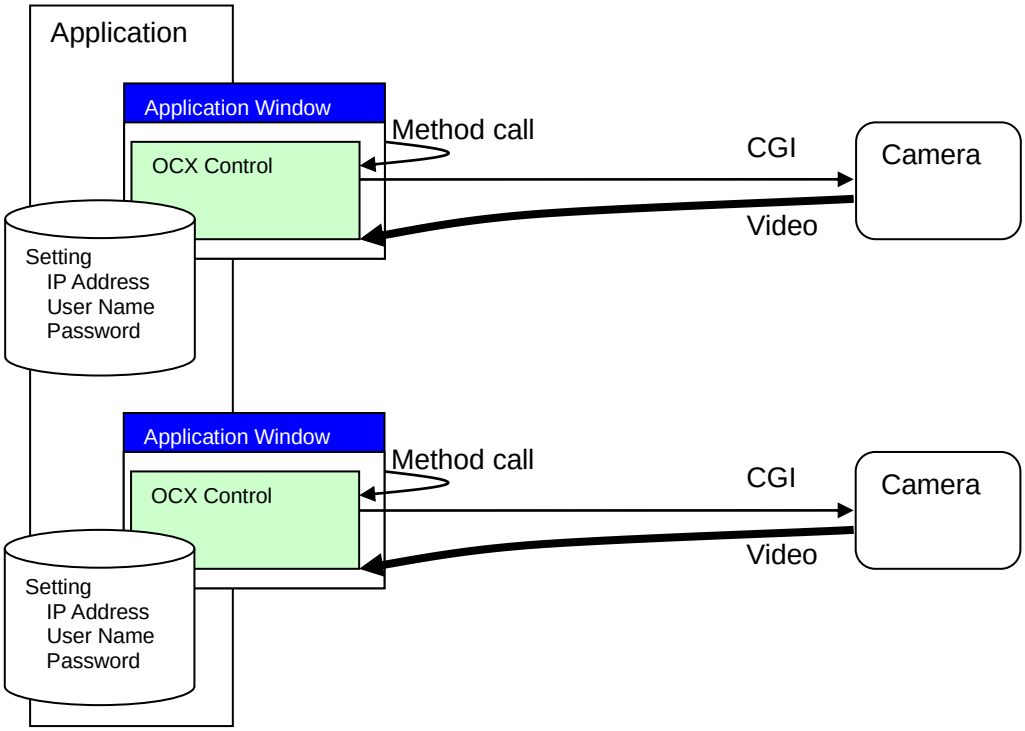

Figure 4-6 Connect to Network Cameras

- Connect to a recording device

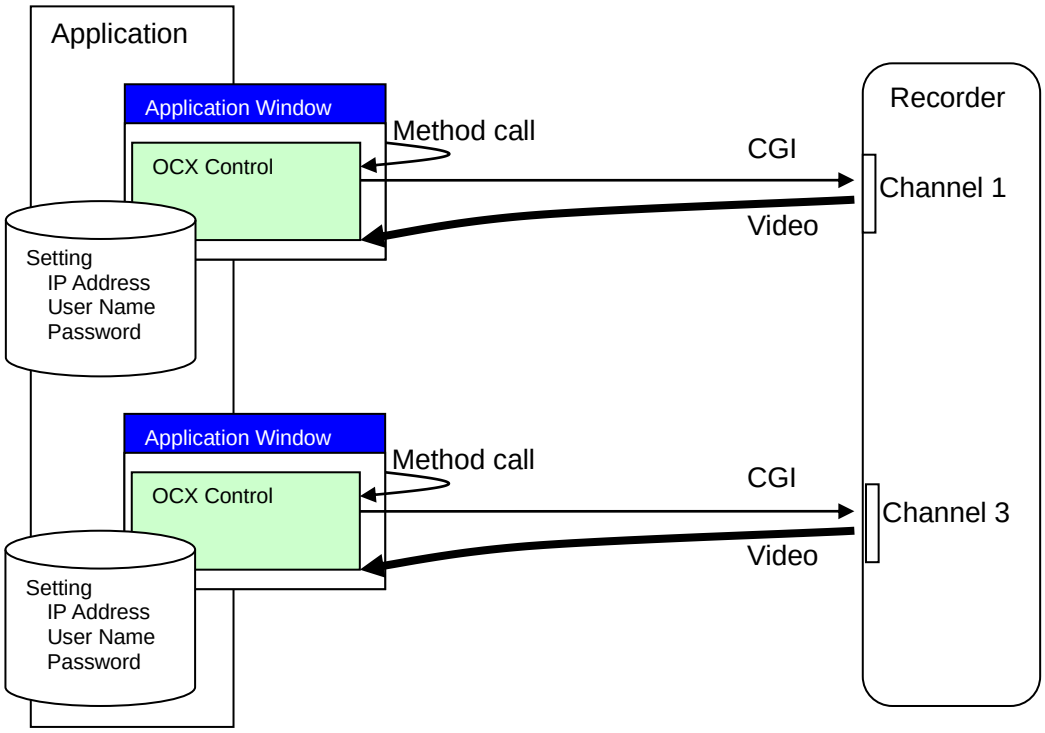

Figure 4-7 Connect to the Recording Device

It is possible to control plural devices from one instance.

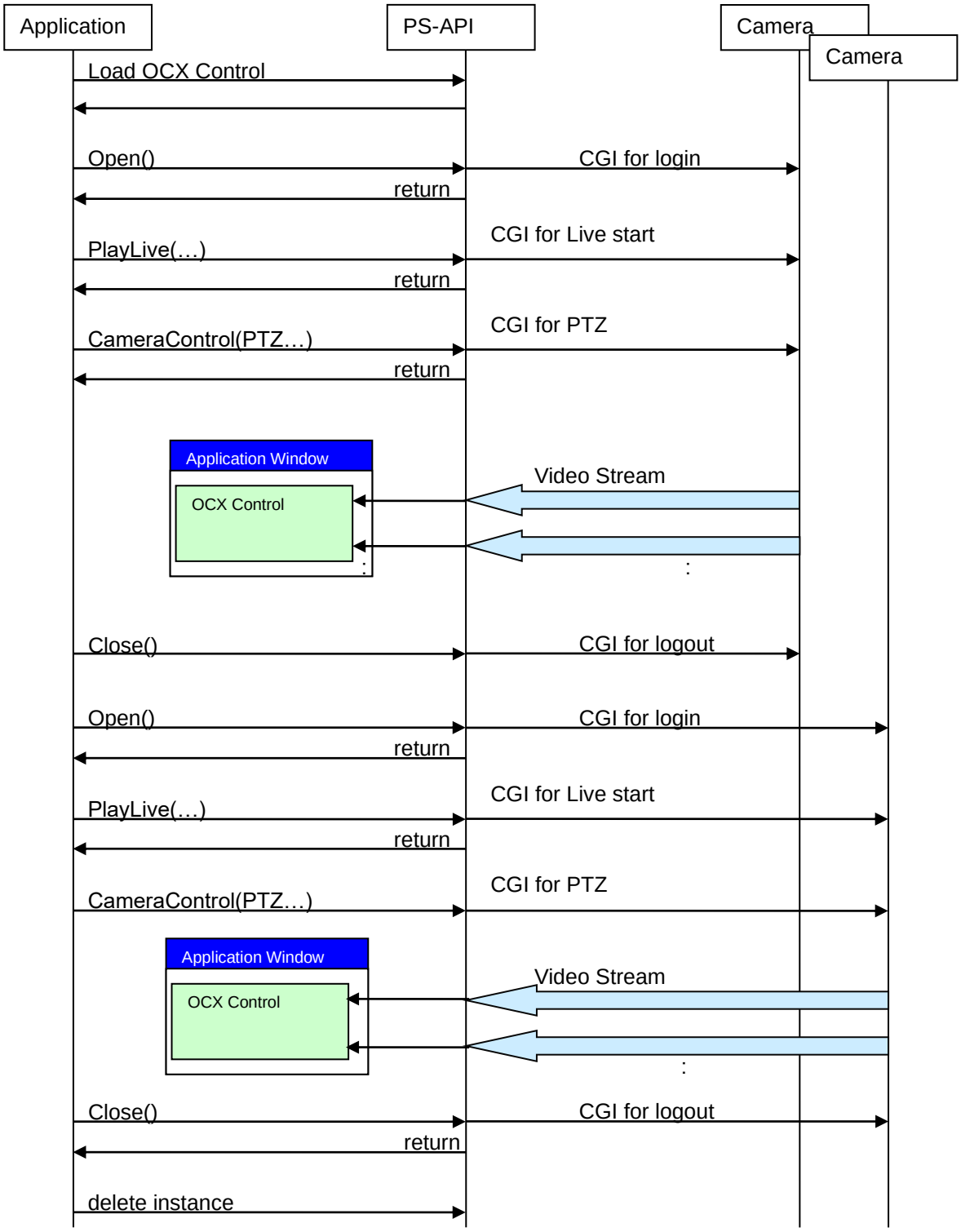

Figure 4-8 Control Plural Devices from One Instance

4.5.2. FTP download

Multiple files cannot be downloaded by using one PS-API instance at the same time. Please call the next download method after finish downloading. If using multiple instances, you can download several files at the same time.

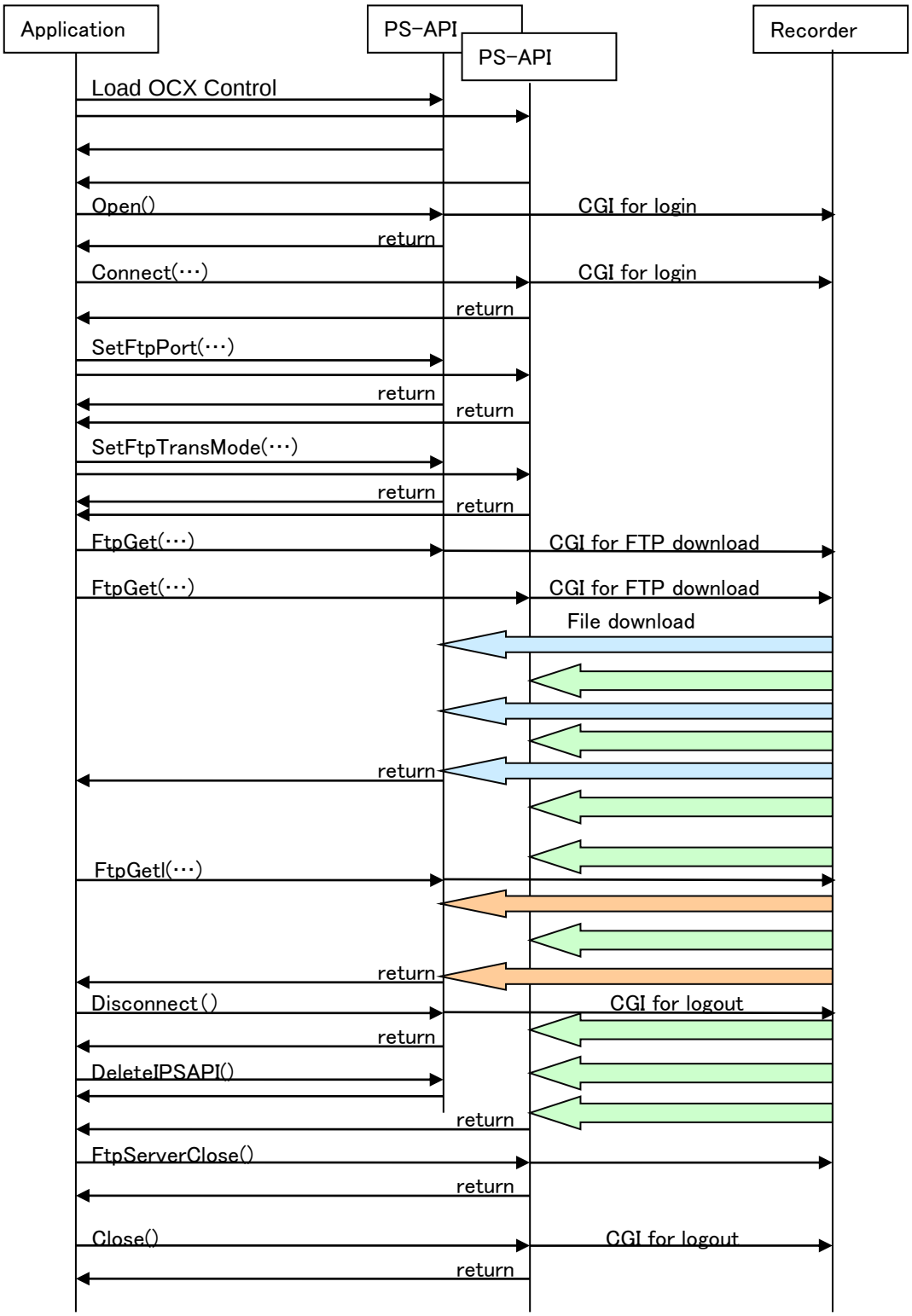

Figure 4-9 FTP Download from Multiple Instances

4.5.3. MP4 or n3 file download

Multiple files cannot be downloaded by using one PS-API instance at the same time. Please call the next download method after finish downloading. If using multiple instances, you can download several files at the same time.

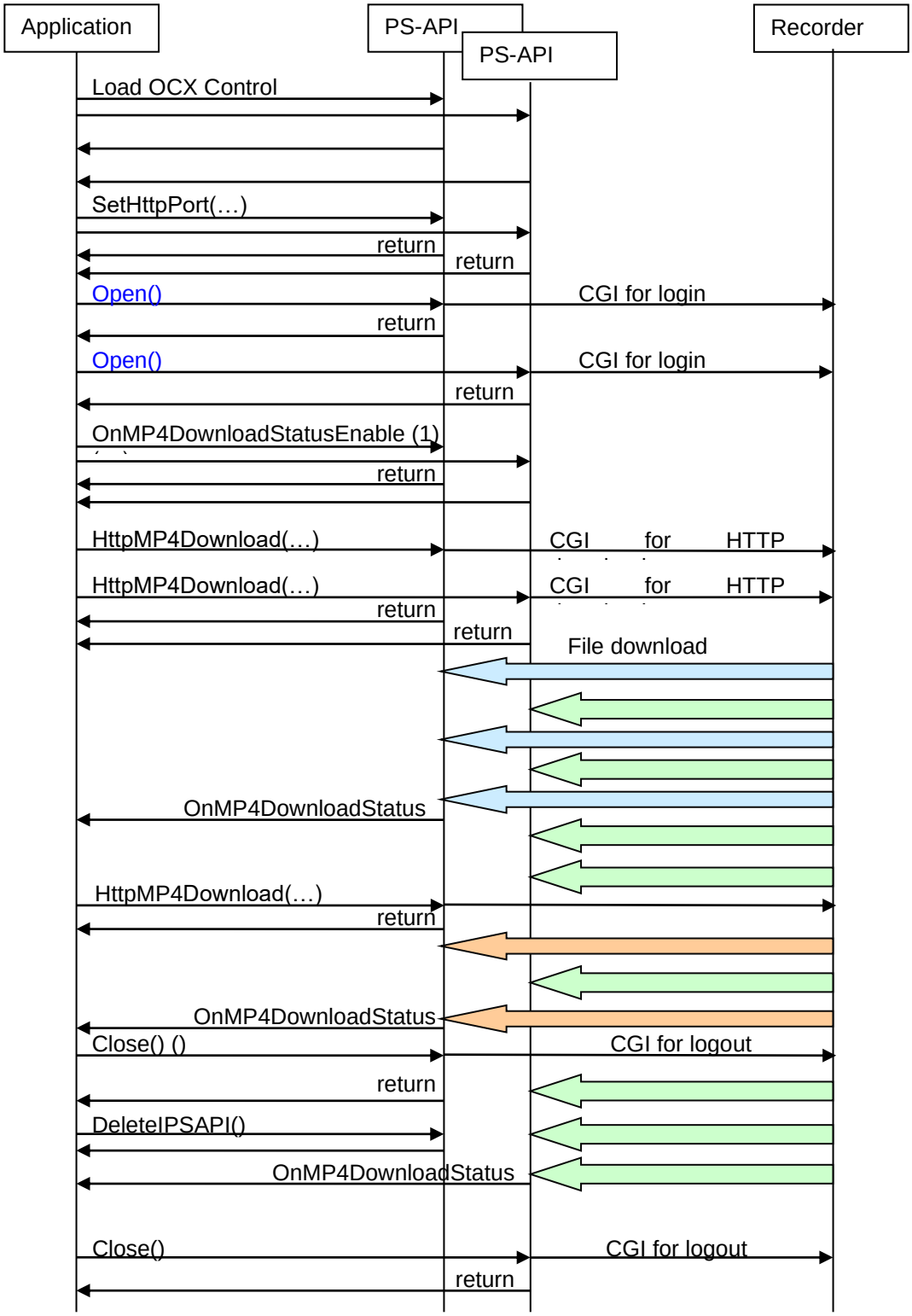

Figure 4-10 MP4 Download from Multiple Instances

4.6. Sync/Async Transaction Operation

In the case of using a PS-API instance, there are two ways of calling a method and a way of receiving a notification.

1. Synchronous method call
2. Asynchronous method call
3. Event notification

4.6.1. Synchronous method call

Synchronous method call is the general way. When a method of PS-API instance is called, the operation is blocked until the processing will be finished.

When calling the synchronous method during processing the asynchronous method, the synchronous method returns error because of “in processing”

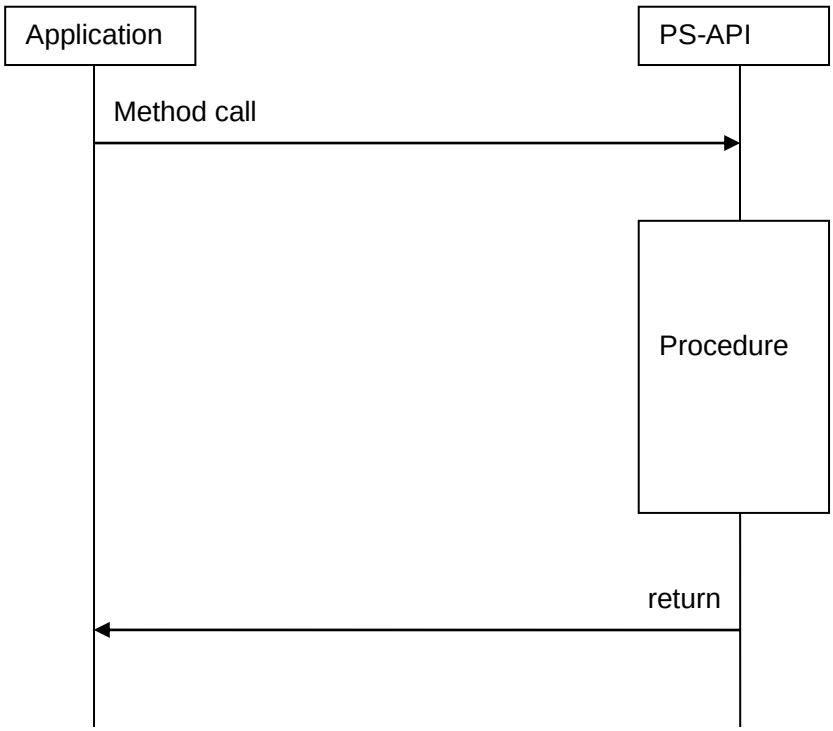

Figure 4-11 Synchronous Method Call

4.6.2. Asynchronous method call

Some methods can be used with the asynchronous mode. When the method of PS-API instance is called with asynchronous mode, PS-API starts processing, and then returns the return value before finishing processing.

When calling the asynchronous method during processing the asynchronous method, the method is in the queue and it will process on after another.

The asynchronous processing result of PS-API is notified via OnxxxxCB Event.

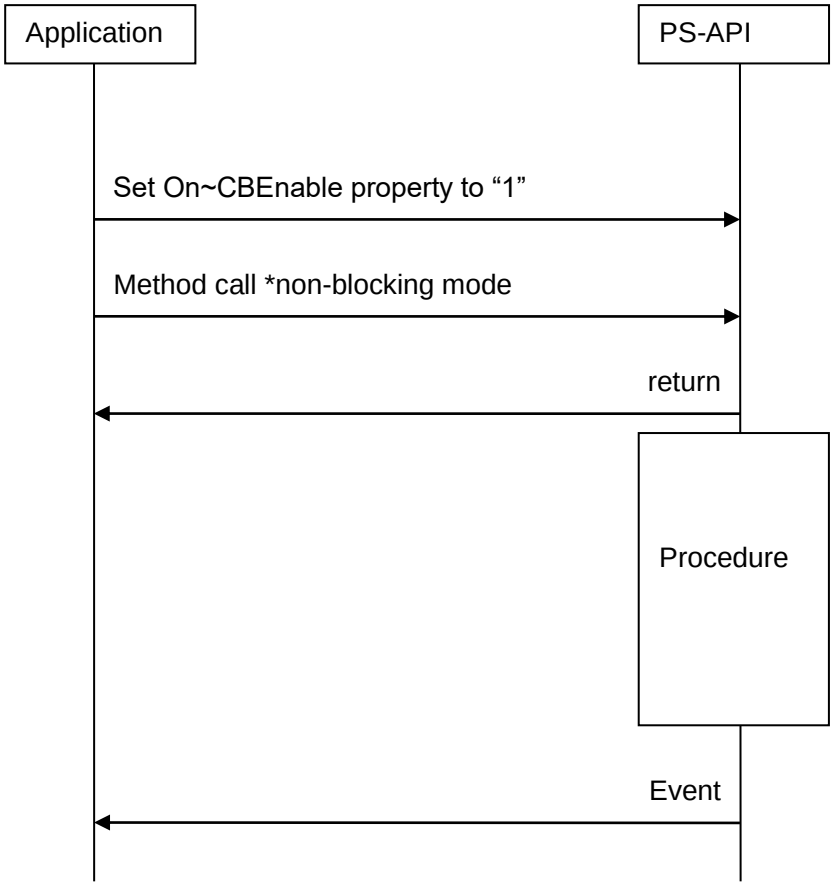

Figure 4-12 Asynchronous Method Call

4.6.3. Receiving a event notification

Application can receive the notification by Onxxxx event to PS-API.

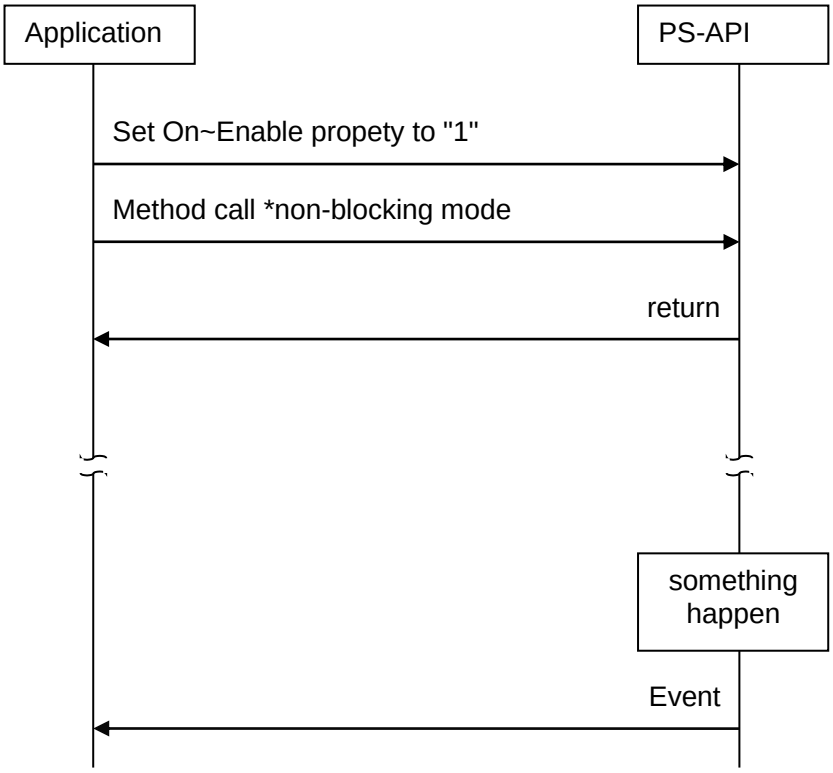

Figure 4-13 Receiving a Event Notification

4.7. About 360-degree Network Camera

When using 360-degree network camera, the behavior depends on the image capture mode of the Network Camera.

4.7.1. How to get the image capture mode of 360-degree network camera

The procedure of getting the image capture mode from 360-degree network camera is as follows.

(1) Execute “GetDevCurrentInfo()” method.
(2) Execute “GetInfoString()” method with “Fisheye_ImageMode”” as keyword.

[SF438 series, SW458 series, SF448 series]

Image capture mode	Value
3M Fisheye mode	3m_fisheye
1.3M Fisheye mode	1.3m_fisheye
1.3M Single PTZ mode	SinglePTZ
1.3M Quad PTZ mode	QuadPTZ
2M Panorama mode	panorama
1M Panorama mode	1m_panorama
2M Double panorama mode	wpanorama
1M Double panorama mode	1m_wpanorama
Panorama and Single PTZ	panorama_SinglePTZ
Panorama and Quad PTZ	panorama_QuadPTZ
Double panorama and Single PTZ	wpanorama_SinglePTZ
Double panorama and Quad PTZ	wpanorama_QuadPTZ
2M Double panorama and Fisheye	wpanorama_1.3m_fisheye
1M Double panorama and Fisheye	1m_wpanorama_1.3m_fisheye
Fisheye and Quad PTZ	1.3m_fisheye_QuadPTZ
2M Panorama and Fisheye	panorama_1.3m_fisheye
1M Panorama and Fisheye	1m_panorama_1.3m_fisheye
VGA 4 stream mode	4stream

[SFV481 series]

Image capture mode	Value
9M Fisheye mode	9m_fisheye
4M Fisheye mode	4m_fisheye
Single PTZ mode	SinglePTZ
Quad PTZ mode	QuadPTZ
Panorama mode	panorama
Double panorama mode	wpanorama
8MFisheye and DoublePanorama	8m_fisheye_wpanorama
4MFisheye and DoublePanorama	4m_fisheye_wpanorama
8MFisheye and Quad PTZ	8m_fisheye_QuadPTZ
4MFisheye and QuadPTZ	4m_fisheye_QuadPTZ
8MFisheye and Panorama	8m_fisheye_panorama
4MFisheye and Panorama	4m_fisheye_panorama
4 stream mode	4stream

[S4550 series, S4551 series, S4556 series]

Image capture mode	Value
Fisheye mode	5m fisheye
Single PTZ mode	5m SinglePTZ
Quad PTZ mode	5m QuadPTZ
Panorama mode	5m panorama
Double panorama mode	5m wpanorama
Fisheye and Double panorama mode	5m fisheye wpanorama
Fisheye and QuadPTZ mode	5m fisheye QuadPTZ
Fisheye and Panorama mode	5m fisheye panorama
4 stream mode	4stream

[X4571 series, X4573 series, S4576 series]

Image capture mode	Value
Fisheye mode	9m fisheye
Single PTZ mode	SinglePTZ
Quad PTZ mode	QuadPTZ
Panorama mode	panorama
Double panorama mode	wpanorama
Fisheye and Double panorama mode	9m fisheye wpanorama
Fisheye and QuadPTZ mode	9m fisheye QuadPTZ
Fisheye and Panorama mode	9m fisheye panorama
4 stream mode	4stream

4.7.2. The explanation if image capture mode of 360-degree network camera
The explanation of the image capture mode and the remarks are as follows.

[SF438 series, SW458 series, SF448 series]

Image capture mode	Remarks
3M Fisheye mode 1.3M Fisheye mode	- PlayLive function works as channel 1 regardless of the specified channel value.
1.3M Single PTZ mode	- PlayLive function works as channel 1 regardless of the specified channel value. - CameraControl/CameraCentering/CameraOperation works as channel 1 regardless of the specified channel value.
1.3M Quad PTZ mode	- PlayLive function works as channel 1 regardless of the specified channel value. - CameraCentering/CameraOperation works as channel 1 regardless of the specified channel value. - CameraControl works with channel parameter (1 to 4) to do Pan/Tilt/Zoom of each area. - When specify 1 or after number as the preset position, the screen of area 1 moves to the specified position. - When specify 0 (home position) as the preset position, the all screen move to the home position.
2M Panorama mode 1M Panorama mode	- PlayLive function works as channel 1 regardless of the specified channel value. - CameraControl/CameraCentering/CameraOperation is not supported with panorama mode. - If you call CamSnaoShot method with fisheye mode, a fisheye snapshot image cannot be gotten. (A panorama image will be displayed.)
2M Double panorama mode 1M Double panorama mode	- PlayLive function works as channel 1 regardless of the specified channel value. - CameraControl/CameraCentering/CameraOperation is not supported with Double panorama mode. - If you call CamSnaoShot method with fisheye mode, a fisheye snapshot image cannot be gotten. (A panorama image will be displayed.)

Image capture mode	Remarks
2 stream mode Panorama and Single PTZ Panorama and Quad PTZ	- PlayLive function works as channel 1 regardless of the specified channel value. - Stream 2 (Single PTZ or Quad PTZ) is not supported. - CameraControl/CameraCentering/CameraOperation is not supported with panorama mode.
2 stream mode Double panorama and Single PTZ Double panorama and Quad PTZ	- PlayLive function works as channel 1 regardless of the specified channel value. - Stream 2 (Single PTZ or Quad PTZ) is not supported. - CameraControl/CameraCentering/CameraOperation is not supported with Double panorama mode.
2 stream mode 2M Double panorama and Fisheye 1M Double panorama and Fisheye	- PlayLive function works as channel 1 regardless of the specified channel value. - Stream 2 (Fisheye) is not supported. -CameraControl/CameraCentering/CameraOperation is not supported with Double panorama mode
2 stream mode Fisheye and Quad PTZ	- PlayLive function works as channel 1 regardless of the specified channel value. - Stream 2 (Quad PTZ) is not supported.
2 stream mode 2M Panorama and Fisheye 1M Panorama and Fisheye	- PlayLive function works as channel 1 regardless of the specified channel value. - Stream 2 (Fisheye) is not supported. -CameraControl/CameraCentering/CameraOperation is not supported with panorama mode
VGA 4 stream mode	- Each channel (1 to 4) can be displayed with PlayLive function. - There is no 2nd stream. - CameraControl/CameraCentering/CameraOperation is not supported with panorama mode.

[SFV481 series]

Image capture mode	Remarks
9M Fisheye mode 4M Fisheye mode	- PlayLive function works as channel 1 regardless of the specified channel value.
Single PTZ mode	- PlayLive function works as channel 1 regardless of the specified channel value. - CameraControl/CameraCentering/CameraOperation works as channel 1 regardless of the specified channel value.
Quad PTZ mode	- PlayLive function works as channel 1 regardless of the specified channel value. - CameraOperation works as channel 1 regardless of the specified channel value. - CameraCentering works with channel parameter (1 to 4) to do centering of each area. - CameraControl works with channel parameter (1 to 4) to do Pan/Tilt/Zoom of each area. - When specify “0 to 4” as the preset position, the screen of area 1 moves to the position1, the screen of area 2 moves to the position2. the screen of area 3 moves to the position3, the screen of area 4 moves to the position4. When specify “5 to 8” as the preset position, the screen of area 1 moves to the position5, the screen of area 2 moves to the position6. the screen of area 3 moves to the position7, the screen of area 4 moves to the position8. the same is true as for "9-12",”13-16”
Panorama mode	- PlayLive function works as channel 1 regardless of the specified channel value. - CameraControl/CameraCentering/CameraOperation is not supported with panorama mode. - If you call CamSnaoShot method with fisheye mode, a fisheye snapshot image cannot be gotten. (A panorama image will be displayed.)
Double panorama mode	- PlayLive function works as channel 1 regardless of the specified channel value. - CameraControl/CameraCentering/CameraOperation is not supported with Double panorama mode. - If you call CamSnaoShot method with fisheye mode, a fisheye snapshot image cannot be gotten. (A panorama image will be displayed.)

Image capture mode	Remarks
2 stream mode 8M Fisheye and Double panorama 4M Fisheye and Double panorama	- PlayLive function works as channel 1 regardless of the specified channel value. - Stream 2 (Double panorama) is not supported. -CameraControl/CameraCentering/CameraOperation is not supported with Fisheye mode
2 stream mode 8M Fisheye and Quad PTZ 4M Fisheye and Quad PTZ	- PlayLive function works as channel 1 regardless of the specified channel value. - Stream 2 (Quad PTZ) is not supported. - CameraControl/CameraCentering/CameraOperation is not supported with Fisheye mode.
2 stream mode 8M Fisheye and panorama 4M Fisheye and panorama	- PlayLive function works as channel 1 regardless of the specified channel value. - Stream 2 (panorama) is not supported. -CameraControl/CameraCentering/CameraOperation is not supported with Fisheye mode
4 stream mode	- Each channel (1 to 4) can be displayed with PlayLive function. - Stream 2 is not supported. - CameraCentering/CameraOperation works as channel 1 regardless of the specified channel value. - CameraControl works with channel parameter (1 to 4) to do Pan/Tilt/Zoom of each area. - When specify “0 to 4” as the preset position, the screen of area 1 moves to the position1, the screen of area 2 moves to the position2. the screen of area 3 moves to the position3, the screen of area 4 moves to the position4. When specify “5 to 8” as the preset position, the screen of area 1 moves to the position5, the screen of area 2 moves to the position6. the screen of area 3 moves to the position7, the screen of area 4 moves to the position8. the same is true as for "9-12",”13-16”

[S4550 series, S4551 series, X4571 series, X4573 series, S4576 series, X4556 series]

Image capture mode	Remarks
Fisheye mode	- PlayLive function works as channel 1 regardless of the specified channel value.
Single PTZ mode	- PlayLive function works as channel 1 regardless of the specified channel value. - CameraControl/CameraCentering/CameraOperation works as channel 1 regardless of the specified channel value.
Quad PTZ mode	- PlayLive function works as channel 1 regardless of the specified channel value. - CameraOperation works as channel 1 regardless of the specified channel value. - CameracCntering/CameraControl works with channel parameter (1 to 4) to do Pan/Tilt/Zoom of each area. - When specify “0 to 4” as the preset position, the screen of area 1 moves to the position1, the screen of area 2 moves to the position2. the screen of area 3 moves to the position3, the screen of area 4 moves to the position4. When specify “5 to 8” as the preset position, the screen of area 1 moves to the position5, the screen of area 2 moves to the position6. the screen of area 3 moves to the position7, the screen of area 4 moves to the position8. the same is true as for "9-12",”13-16”
Panorama mode	- PlayLive function works as channel 1 regardless of the specified channel value. - CameraControl/CameraCentering/CameraOperation is not supported with panorama mode. - If you call CamSnaoShot method with fisheye mode, a fisheye snapshot image cannot be gotten. (A panorama image will be displayed.)
Double panorama mode	- PlayLive function works as channel 1 regardless of the specified channel value. - CameraControl/CameraCentering/CameraOperation is not supported with Double panorama mode. - If you call CamSnaoShot method with fisheye mode, a fisheye snapshot image cannot be gotten. (A panorama image will be displayed.)

Image capture mode	Remarks
2 stream mode Fisheye and Double panorama	- PlayLive function works as channel 1 regardless of the specified channel value. - Stream 2 (Double panorama) is not supported. -CameraControl/CameraCentering/CameraOperation is not supported with Fisheye mode
2 stream mode Fisheye and Quad PTZ	- PlayLive function works as channel 1 regardless of the specified channel value. - Stream 2 (Quad PTZ) is not supported. - CameraControl/CameraCentering/CameraOperation is not supported with Fisheye mode.
2 stream mode Fisheye and panorama	- PlayLive function works as channel 1 regardless of the specified channel value. - Stream 2 (panorama) is not supported. -CameraControl/CameraCentering/CameraOperation is not supported with Fisheye mode
4 stream mode	- Each channel (1 to 4) can be displayed with PlayLive function. - Stream 2 is not supported. - CameraCentering/CameraOperation works as channel 1 regardless of the specified channel value. - CameraControl works with channel parameter (1 to 4) to do Pan/Tilt/Zoom of each area. - When specify “0 to 4” as the preset position, the screen of area 1 moves to the position1, the screen of area 2 moves to the position2. the screen of area 3 moves to the position3, the screen of area 4 moves to the position4. When specify “5 to 8” as the preset position, the screen of area 1 moves to the position5, the screen of area 2 moves to the position6. the screen of area 3 moves to the position7, the screen of area 4 moves to the position8. the same is true as for "9-12",”13-16”

4.8. Restriction by device settings

4.8.1. Smart Cording

There are following restrictions when “Smart Coding mode” is set to “ON”, “ON(Low)” , “ON(Mid)” , “ON(High)” , “ON(Advanced)” in the “Transmission priority” setting of the camera.

(1) Live

[In the case of “ON” or “ON(Low)”]

- It may take 8 seconds at maximum for images to be displayed.

[In the case of “ON(Mid)” or “ON(High)”]

- It may take 16 seconds at maximum for images to be displayed.

(2) Network playback

[In the case of “ON” or “ON(Low)”]

- For playback, jump, and skip, it may take 8 seconds at maximum for images to be displayed.
- The speed rate for the fast playback may be increased compared to the standard setting.
  (For example, images will be forwarded 32 seconds at maximum in Step 2.)
- The images may be seen stopped for 8 seconds at maximum in the frame playback or reverse frame playback.
- In playback with the alarm time and date, alarm images may not be displayed during playback.

[In the case of “ON(Mid)” or “ON(High)”]

- For playback, jump, and skip, it may take 16 seconds at maximum for images to be displayed.
- The speed rate for the fast playback may be increased compared to the standard setting.
  (For example, images will be forwarded 64 seconds at maximum in Step 2.)
- The images may be seen stopped for 16 seconds at maximum in the frame playback or reverse frame playback.
- In playback with the alarm time and date, alarm images may not be displayed during playback.

[In the case of “ON(Frame rate control)”]

- It does not supported to the stream delivered with this setting.

5. Details of Functions

This chapter describes the detailed functions of OCX.

5.1. Object

5.1.1. Object Definition

Table 5-1 Object Definition

No.	Object Name	Overview
1	PSAPI Control	It is the OCX Control for using PS-API functions from an application. Display a video image and control a device by calling the method.

5.1.1.1. PSAPI Control

```
[method]
long    Open( );
long    Connect(long   uid);
void    Close( );
void    Disconnect( );
long    ClearWaitingFunc( );
long    GetWaitingFuncCount( );
long    GetDeviceStatus(long   channel);
long    GetLoginStatus();
long    GetUIDInfo();
long    GetSIDInfo();
long    RecCtrl(long   channel, long   command, long   mode);
long    GetRecCtrlStatus(long   channel);
long    Search(long   channel, BSTR   startTimeDate, BSTR   endTimeDate,
                long   type, long   mode);;
long    SearchEx(long   channel, BSTR   startTimeDate, BSTR   endTimeDate,
                 long   type, long   mode);
long    VmdSearchEx(long   channel, BSTR   startTimeDate, BSTR   endTimeDate, long   mask,
                long   aSensitivity, long   axTopLeft, long   ayTopLeft, long   axBottomRight,
                long   ayBottomRight, long   bSensitivity, long   bxTopLeft, long   byTopLeft,
                long   bxBottomRight, long   byBottomRight, long   cSensitivity, long   cxTopLeft,
                long   cyTopLeft, long   cxBottomRight, long   cyBottomRight, long   dSensitivity,
                long   dxTopLeft, long   dyTopLeft, long   dxBottomRight, long   dyBottomRight,
                long   imageWidth, long   imageHeight, long   mode);
long    SearchCancel( );
BSTR    GetDeviceLog(long   type, long   maxCount);
BSTR    GetDevTimeZone();
long    GetDevCurrentInfo( );
BSTR    GetInfoString(BSTR key);
long    SetCameraTime(BSTR   timeDate, long   isDst);
long    GetStatisticsData(BSTR   startTimeDate, BSTR   endTimeDate, BSTR   fileName);
long    SetUIDPriority(long   command);
BSTR    GetFrameTime( );
long    PlayLive(long   channel, long   mode);
long    Play(long   channel, BSTR   timeData, long   mode);
long    PlayFile(BSTR   fileName, long   mode);
long    PlayControl(long   command, long   speed, long   mode);
long    PlayControlByTime(BSTR   timeData, long   isDst, long   mode);
void    ClearImage();
```

```
long      GetPlayStatus( );
long      GetPlaySpeed( );
long      GetFrameRate( );
long      GetPicturePosition( );
long      GetImageResolution( );
void      ClearImage( );
long      SaveJpegImage(BSTR   fileName);
IPicture* GetJpegImage( );
long      SaveBitmapImage(BSTR   fileName);
IPicture* GetBitmapImage( );
long      TitleOperation(long   id, long   command, BSTR   text, long   xPosition, long   yPosition,
                long   align, BSTR   font, long   fontSize, long   foreColor,
                long   borderColor, long   style);
long      TitleOperationEx (long   id, long   command, BSTR   text, long   xPosition, long   yPosition,
                long   align, BSTR   font, long   fontSize, long   foreColor,
                long   borderColor, long   style, long transmissivity);
BSTR      GetTitle(long   id);
long      BoxOperation(long   id, long   command, long   color, long   size,
                long   xTopLeft, long   yTopLeft, long   xBottomRight, long   yBottomRight);
long      BoxOperationEx (long   id, long   command, long   color, long   size,
                long   xTopLeft, long   yTopLeft, long   xBottomRight, long   yBottomRight,
                long transmissivity);
long      BitmapOperationEx(long   id, long   command, BSTR   filename,
                long   xPosition, long   yPosition, long   maskColor, long transmissivity);
long      DigitalZoomMove(long   xPosition, long   yPosition);
long      GetDigitalZoomPosition( );
long      MultiSynvPause();
long      MultiSyncTime(BSTR   syncTime, long   isDst);
long      CamSnapShot(long   channel, long imageMode);
long      SetCroppingRect (long   id, long   ltX, long   ltY, long   rbX, long   rbY);
long      GetCroppingRect (long   id);
long      SetCroppingDrawRect (long   id, long   ltX, long   ltY, long   rbX, long   rbY);
long      GetCroppingDrawRect (long   id);
long      SetCroppingDrawEnabled (long   id, long   mode);
long      GetCroppingDrawEnabled (long   id);
long      SetCroppingMarker(long   id, long   mode, long   ltX, long   ltY, long   rbX, long   rbY,
                long   lineSize, long   lineColor, long   ellipseSize, long   ellipseColor);
long      GetCroppingmarker(long   id);
long      HttpMP4Download(long   channel, long   command, char*   startTimeDate,
                char*   endTimeDate, long   audioMode, char*   filename);
long      HttpDownload (long   channel, long   command, char*   startTimeDate, long   isDstSt,
                char*   endTimeDate, long   isDstEt, long   dataType, char*   filename );
long      GetMP4DownloadStatus();
long      GetMP4DownloadTransrate();
long      AudioSend(long   command);
long      GetAudioSendStatus();
long      CameraControl(long   channel, long   pan, long   tilt, long   zoom, long   focus, long   iris);
long      SetCameraPosition(long   channel, long   pan, long   tilt, long   zoom, long   focus);
long      GetCameraPosition(long   channel);
long      CameraOperation(long   channel, long   command, long   data, long   mode);
long      GetCameraOperationStatus(long   channel);
long      CameraCentering(long   xPosition, long   yPosition, long   imageWidth, long   imageHeight);
long      CameraAuxControl(long   channel, long   almTrmNo, long   command);
long      GetCameraAuxStatus(long   channel, long   almTrmNo);
long      SetCameraImageCap(long   mode, long   installation);
long      CameraWiperControl(long   channel, long   command);
long      AlarmOperation(long   channel, long   command, long   mode);
```

```
long    GetAlarmStatus( );
long    FtpGet(long   channel, BSTR   startTimeDate, BSTR   endTimeDate, long   dataType
                long   eventType, BSTR   fileName, long   mode);
long    FtpCancel();
long    FtpServerClose();
long    GetFtpStatus();
long    GetFtpTransRate();
long    GetFtpTransByte();
```

[Property]

long	DeviceType
BSTR	IPAddr
long	HttpPort
long	HttpTimeout
BSTR	Proxyname
long	ProxyPort
long	AccessType
long	UID
BSTR	UIDEx
BSTR	UserName
BSTR	Password
long	UIDInfoMax
long	UIDInfoUse
long	SIDInfoMode
long	SIDInfoMax
long	SIDInfoUse
long	SecureCommunicationMode
long	CertificateVerifyEnable
long	OnErrorEnable
BSTR	DeviceModel
BSTR	SearchMultiChMask
BSTR	SearchResult
BSTR	SearchResultEx
long	CameraPosPan
long	CameraPosTilt
long	CameraPosZoom
long	CameraPosFocus
long	OnDevStatusEnable
long	OnRecStatusEnable
long	OnRecStatusCBEnable
long	OnSearchCBEnable
long	OnSearchExCBEnable
long	MPEG4Port
long	H264Port
long	RtpPortMode
long	RtpPortRange
long	MulticastAutoConf
BSTR	MulticastAddr
long	MPEG4Resolution
long	H264Resolution
long	JPEGResolution
long	ImageResolutionWidth
long	ImageResolutionHeight
long	StreamFormat
BSTR	FilePassword
long	BackColor
long	StreamNumber
long	InternetMode
long	FastPlayMode
long	TransFrameRate
long	PictureFitMode
long	PicturePosTopX
long	PicturePosTopY
long	PicturePosBottomX
long	PicturePosBottomY

long	DigitalZoom
long	DigitalZoomMode
long	DigitalZoomPositionX
long	DigitalZoomPositionY
long	SkipRecordGap
long	MultiScreenChannel
long	SIDMode
long	CroppingEnabled
long	DecResolutionMode
long	CropRectLtX
long	CropRectLtY
long	CropRectRbX
long	CropRectRbY
long	CropDrawRectLtX
long	CropDrawRectLtY
long	CropDrawRectRbX
long	CropDrawRectRbY
long	CropDrawMode
long	CropMarkerMode
long	CropMarkerLtX
long	CropMarkerLtY
long	CropMarkerRbX
long	CropMarkerRbY
long	CropMarkerLSize
long	CropMarkerLColor
long	CropMarkerESize
long	CropMarkerEColor
long	OnPlayStatusEnable
long	OnRecordStatusEnable
long	OnImageRefreshEnable
long	OnPlayStatusCBEnable
long	OnMP4downloadStatusEnable
long	AudioRcvEnable
long	RcvAudioDec
long	AudioRcvVolume
long	AudioRcvMute
long	AudioSendVolume
long	AudioSendMute
long	CameraPosPan
long	CameraPosTilt
long	CameraPosZoom
long	CameraPosFocus
long	OnOpStatusEnable
long	OnOpStatusCBEnable
long	OnAlmStatusEnable
long	OnAlmStatusCBEnable
long	FtpPort
long	FtpTransMode
long	OnFtpStatusCBEnable
long	MouseDownEnable
long	MouseUpEnable
long	DbClickEnable
long	MouseMoveEnable
long	MouseWheelEnable

```
[Event]
void    OnError(long   errorCode, BSTR   description);
void    OnDevStatus(long   channel, long   status);
void    OnRecStatus (long   channel, long   status);
void    OnRecStatusCB(long   channel, long   status);
void    OnSearchCB();
void    OnSearchExCB();
void    OnPlayStatus(long   channel, long   status);
void    OnImageRefresh( );
void    OnPlayStatusCB(long   status);
void    OnRecordStatus(long   recType, BSTR   timeDate, long   isDst,
                       BSTR   nextRecTime, long   isDstNext);
void    OnOpStatus (long   channel, long   status);
void    OnOpStatusCB (long   status);
void    OnAlmStatus (long   channel, long   type, BSTR   timeDate, long   status);
void    OnAlmStatusCB (long      status);
void    OnFtpStatusCB (long   status);
void    OnMP4DownloadStatus(long   status, char*   fileName);
void    MouseDown(short   Button, short   Shift, long   x, long   y);
void    MouseUp(short   Button, short   Shift, long   x, long   y);
void    DblClick(short   Button, short   Shift, long   x, long   y);
void    MouseMove(short   Button, short   Shift, long   x, long   y);
void    MouseWheel(short   Button, short   Shift, short   wheel, long   x, long   y);
```

5.2. PS Builder Group

5.2.1. Method

5.2.1.1. Open

Object	**PSAPI Control**
Method	**Open**

long Open( );

Description

Log in to the device, and get UID.

Argument

None

Return value

Positive value	Success in connecting to the device. (HD300, NWDR, HD600/700, NX Series) The return value is UID.
0	Success in connecting to the device. (NW camera, encoder)
Negative value	Failure to connect to the device

Error

Get the error information by OnError event.

Note

Sequence

6.1 PlayLive
6.17 SSL

Sample program code

[Visual Basic 2012] ..¥Sample Program¥PS-API¥Visual Basic 2012¥001_PlayLive
[Visual C# 2012] ..¥Sample Program¥PS-API¥Visual CSharp¥001_PlayLive
[HTML] ..¥Sample Program¥PS-API¥HTML¥001_PlayLive

Reference

5.2.1.2. Connect

Object	**PSAPI Control**
Method	**Connect**

```
long    Connect(
            long    uid
            );
```

Description

Connect to the device with the specified UID which other instance got by the login.

Argument

uid	Positive value	UID which other instance got.

Return value

0	Success in connecting to the device.
Except 0	Error code

Error

Error is defined by the return value.
Get the error information by OnError event.

Note

Sequence

6.9 MultiPlayLive

Sample program code

[Visual Basic 2012] ..¥Sample Program¥PS-API¥Visual Basic 2012¥009_MultiPlayLive
[Visual C# 2012] ..¥Sample Program¥PS-API¥Visual CSharp¥ 009_MultiPlayLive
[HTML] ..¥Sample Program¥PS-API¥HTML¥009_MultiPlayLive

Reference

5.2.1.3. Close

Object	**PSAPI Control**
Method	**Close**

void Close( );

Description

Stop the HTTP connection, and log out from the device.
UID is annulled.

Argument

None

Return value

None

Error

Get the error information by OnError event.

Note

Sequence

6.1 PlayLive

Sample program code

[Visual Basic 2012] ..¥Sample Program¥PS-API¥Visual Basic 2012¥001_PlayLive
[Visual C# 2012] ..¥Sample Program¥PS-API¥Visual CSharp¥ 001_PlayLive
[HTML] ..¥Sample Program¥PS-API¥HTML¥001_PlayLive

Reference

5.2.1.4. Disconnect

Object	**PSAPI Control**
Method	**Disconnect**

void Disconnect( );

Description

Stop the HTTP connection.
UID is NOT annulled.

Argument

None

Return value

None

Error

Get the error information by OnError event.

Note

Sequence

6.9 MultiPlayLive

Sample program code

[Visual Basic 2012] ..¥Sample Program¥PS-API¥Visual Basic 2012¥009_MultiPlayLive
[Visual C# 2012] ..¥Sample Program¥PS-API¥Visual CSharp¥ 009_MultiPlayLive
[HTML] ..¥Sample Program¥PS-API¥HTML¥009_MultiPlayLive

Reference

5.2.1.5. ClearWaitingFunc

Object	**PSAPI Control**
Method	**ClearWaitingFunc**

long ClearWaitingFunc ( );

Description

Cancel the waiting function of async type method.

Argument

None

Return value

0	Success
Except 0	Error code

Error

Error is defined by the return value.
Get the error information by OnError event.

Note

The function in processing cannot be deleted.
The callback of the deleted async mode method is not notified.
If you clear the waiting queue by using this method, the callback of the processing async mode method is notified
Please don't destruct the callback object before the callback object is called.

Sequence

Sample program code

Reference

5.2.1.6. GetWaitingFuncCount

Object	**PSAPI Control**
Method	**GetWaitingFuncCount**

void GetWaitingFuncCount ( );

Description

Get the waiting function of async type method count.

Argument

None

Return value

0 and over	The waiting method count.
Negative value	Error code

Error

Error is defined by the return value.
Get the error information by OnError event.

Note

Sequence

Sample program code

Reference

5.2.1.7. GetLoginStatus

Object	**PSAPI Control**
Method	**GetLoginStatus**
long	GetLoginStatus( );

Description

Get login result. If login failure, the reason of failure returns.

Argument

None

Return value

-1	Open/Connect not executed.
0	Open/Connect success
1	(Recorder response) User excess
2	(Recorder response) Authentication error
3	(Recorder response) Network impossible
4	(Recorder response) Host attestation
5	(Recorder response) Config state
6	(Recorder response) In measurement
7	(Recorder response) Config user attestation
8	(Recorder response) Restarting state
9	(Recorder response) Sleep state
10	(Recorder response) Play only state
11	(Recorder response) No disk
12	(Recorder response) IP easy setup connected state
13	(Recorder response) Being configuration state
14	(Recorder response) Blackout
15	Other errors

Error

Get the error information by OnError event.

Note

For NX series models other than NX100, NX200, NX300, and NX400, when authentication error, "15" is notified instead of "2".

Sequence

Sample program code

Reference

5.2.1.8. GetUIDInfo

Object	**PSAPI Control**
Method	**GetUIDInfo**

long GetUIDInfo( );

Description

Get the maximum number of UID that recorder can issue and the number of UID which is in use.
The maximum number of UID that recorder can issue is set to UIDInfoMax property.
The number of UID which is in use is set to UIDInfoUse property.

Argument

None

Return value

0	Success
Except 0	Error code

Error

Error is defined by the return value.
Get the error information by OnError event.

Note

Sequence

Sample program code

Reference

5.2.1.9. GetSIDInfo

Object	**PSAPI Control**
Method	**GetSIDInfo**

long GetSIDInfo( );

Description

Get the information of StreamID support, the maximum number of StreamID that recorder can issue, and the number of StreamID which is in use.
The information of StreamID support is set to SIDInfoMode property.
The maximum number of StreamID that recorder can issue is set to SIDInfoMax property.
The number of StreamID which is in use is set to SIDInfoUse property.

Argument

None

Return value

0	Success
Except 0	Error code

Error

Error is defined by the return value.
Get the error information by OnError event.

Note

Sequence

Sample program code

Reference

5.2.2. Property

5.2.2.1. DeviceType

Object	**PSAPI Control**
Property	**DeviceType**

long DeviceType

Description

Set a device type of a target device into PS-API.
Get a device type of a target device from PS-API.

Value

0 : HD300	Digital Disk Recorder (HD300)
1 : NWDR	Network Disk Recorder(except for NX Series)
2 : Camera	Network Camera
3 : Encoder	Network Interface Unit
4 : HD600/700	Digital Disk Recorder (HD600/700)
6 : NX Series	Network Disk Recorder(NX Series/NU Series)

Default value is 2.

Return value

None

Error

Note

Sequence

6.1 PlayLive

Sample program code

[Visual Basic 2012] ..¥Sample Program¥PS-API¥Visual Basic 2012¥001_PlayLive
[Visual C# 2012] ..¥Sample Program¥PS-API¥Visual CSharp¥ 001_PlayLive
[HTML] ..¥Sample Program¥PS-API¥HTML¥001_PlayLive

Reference

5.2.2.2. IPAddr

Object	**PSAPI Control**
Property	**IPAddr**

BSTR IPAddr

Description

Set IP Address or host name of a target device into PS-API.
Get IP Address or host name of a target device from PS-API.

Value

Character strings (255bytes or less)	IP Address or host name e.g. 192.168.0.10 Default value is “192.168.0.10”.

Return value

None

Error

Note

When 0 is added at the top of segment like as 192.168.000.010, it is treated with octal number.
When port number is written after : (colon) like as 192.168.0.10:8080, error occurs.

PS-API does not support DDNS name resolver.
When both IPv6 address and IPv4 address are set as host name, connect with IPv6 address.
In the case of IPv6 address, you can set interface number by using “%", like as “2001::1%1”
In the case of IPv6 address and stream format are H265 / H264, the video may not be displayed.

Sequence

6.1 PlayLive

Sample program code

[Visual Basic 2012] ..¥Sample Program¥PS-API¥Visual Basic 2012¥001_PlayLive
[Visual C# 2012] ..¥Sample Program¥PS-API¥Visual CSharp¥ 001_PlayLive
[HTML] ..¥Sample Program¥PS-API¥HTML¥001_PlayLive

Reference

5.2.2.3. HttpPort

Object	**PSAPI Control**
Property	**HttpPort**
long	HttpPort

Description

Set HTTP server port number of a target device into PS-API.
Get HTTP server port number of a target device from PS-API.

Value

1 to 65535	HTTP server port. Default value is 80.

Return value

None

Error

Note

When 0 is added at the top of segment like as 192.168.000.010, it is treated with octal number.

Sequence

6.1 PlayLive

Sample program code

[Visual Basic 2012] ..¥Sample Program¥PS-API¥Visual Basic 2012¥001_PlayLive
[Visual C# 2012] ..¥Sample Program¥PS-API¥Visual CSharp¥ 001_PlayLive
[HTML] ..¥Sample Program¥PS-API¥HTML¥001_PlayLive

Reference

5.2.2.4. HttpTimeout

Object	**PSAPI Control**
Property	**HttpTimeout**
long	HttpTimeout

Description

Set HTTP communication timeout value for the HTTP server into PS-API.
Get HTTP communication timeout value for the HTTP server from PS-API.

Value

	1 to 60 Second scale.	Http server timeout value. Default value is 10 seconds.

Return value

None

Error

Note

When PS-API fails communication because of time-out or other reason, PS-API try to communicate again. Therefore the time-out error occurs after about 2 times interval of the time-out value set in HttpTimeout.
Depends on the version of installed Internet Explorer, the timeout error occurs before 2 times interval of the time-out value set in HttpTimeout.
In case of a NX Series, when operate the Search method, SearchEx method, VMDSearchEx method, and FtpGet method, the timeout value is fixed at 60 seconds.

Sequence

Sample program code

Reference

5.2.2.5. ProxyName

Object	**PSAPI Control**
Property	**ProxyName**
BSTR	ProxyName

Description

Set Proxy name or network address into PS-API.
Get Proxy name or network address from PS-API.

Value

Character strings (255bytes or less)	Proxy name or Network address Default value is “” (empty string).

Return value

None

Error

Note

When 0 is added at the top of segment like as 192.168.000.010, it is treated with octal number.
When port number is written after : (colon) like as 192.168.0.10:8080, error occurs.

PS-API does not support DDNS name resolver.
When both IPv6 address and IPv4 address are set as host name, connect with IPv6 address.
Interface number cannot be specified to ProxyName.

Sequence

Sample program code

Reference

5.2.2.6. ProxyPort

Object	**PSAPI Control**
Property	**ProxyPort**
long	ProxyPort

Description

Set Proxy port number into PS-API.
Get Proxy port number from PS-API.

Value

1 to 65535	Proxy port number Default value is 80.

Return value

None

Error

Note

When the Proxy name isn’t specified, an application should ignore the proxy port number setting.

Sequence

Sample program code

Reference

5.2.2.7. AccessType

Object	**PSAPI Control**
Property	**AccessType**
long	AccessType

Description

Set the type of an access method into PS-API to communicate with its server.
Get the type of an access method from PS-API to communicate with its server.

Value

0 : Depends on IE setting 1 : Direct access 2 : Proxy server access	It retrieves setting from Internet Explorer. The web server must be configured to listen to the desired ports . Via proxy server access. Default value is 0.

Return value

None

Error

Note

When ProxyName isn’t specified though AccessType is set to “2”, it retrieves setting from Internet Explorer.

Sequence

Sample program code

Reference

5.2.2.8. UID

Object	**PSAPI Control**
Property	**UID**
long UID	

Description

Get UID that is retrieved from a target device.

For NX Series other than NX100, NX200, NX300, NX400 get the UID converted inside PS-API.Then please use GetUID or GetUIDEx according to the following cases.

- 5.2.2.8 UID : Get the UID used when executing a method defined in PS-API (for example, Connect() method).
- 5.2.2.9 UIDEx : Get the UID used when executing recorder CGI command directly from the application.

Value

-1 : Not login	Get UID.
0 : Logined	Login to Network Camera or Encoder
1 to 2,147,483,647 : Logined UID	Login to NWDR, HD300, HD600/700, NX Series.

Return value

None

Error

Note

When connecting to NX recorder using PS-API V13.10 or later,
If the return value is "-1" and you execute UIDEx and get a value of 1 or more, there is an inconsistency between UID property and UIDEx property, so execute the following.

・For instances connected to the recorder using Open(), execute Close().
・For the instance connected to the recorder using Connect(), execute Disconnect().

Please refer to the following URL for recorder CGI command.
https://i-pro.com/products_and_solutions/en/surveillance/learning-and-support/device-integration/networkvideo-recorders

Sequence

Sample program code

5.2.2.9. UIDEx

Object	**PSAPI Control**
Property	**UIDEx**
BSTR	UIDEx

Description

Get UID that is retrieved from a target device.

For NX Series other than NX100, NX200, NX300, NX400, then please use GetUID or GetUIDEx according to the following cases.

- 5.2.2.8 UID : Get the UID used when executing a method defined in PS-API (for example, Connect() method).
- 5.2.2.9 UIDEx : Get the UID used when executing recorder CGI command directly from the application.

Value

-1 : Not login 0 : Logined 1 or more : Logined UID	Get UID. Login to Network Camera or Encoder Login to NWDR, HD300, HD600/700, NX Series.

Return value

None

Error

Note

Please refer to the following URL for recorder CGI command.
https://i-pro.com/products_and_solutions/en/surveillance/learning-and-support/device-integration/networkvideo-recorders

Sequence

Sample program code

Reference

5.2.2.10. UserName

Object	**PSAPI Control**
Property	**UserName**

BSTR UserName

Description

Set a user name into PS-API for logging in to a target device.
Get a user name from PS-API for logging in to a target device.

Value

Character strings (255bytes or less)	Login user name. If user authentication is set to off, please set UserName to “”. Default value is “” (empty string).

Return value

None

Error

Note

Sequence

6.1 PlayLive

Sample program code

[Visual Basic 2012] ..¥Sample Program¥PS-API¥Visual Basic 2012¥001_PlayLive
[Visual C# 2012] ..¥Sample Program¥PS-API¥Visual CSharp¥ 001_PlayLive
[HTML] ..¥Sample Program¥PS-API¥HTML¥001_PlayLive

Reference

5.2.2.11. Password

Object	**PSAPI Control**
Property	**Password**

BSTR Password

Description

Set a user password into PS-API for logging in to a target device.
Get a user password from PS-API for logging in to a target device.

Value

Character strings (255bytes or less)	Login password. If user authentication is set to off, please set UserName to “”. Default value is “” (empty string).

Return value

None

Error

Note

Sequence

6.1 PlayLive

Sample program code

[Visual Basic 2012] ..¥Sample Program¥PS-API¥Visual Basic 2012¥001_PlayLive
[Visual C# 2012] ..¥Sample Program¥PS-API¥Visual CSharp¥ 001_PlayLive
[HTML] ..¥Sample Program¥PS-API¥HTML¥001_PlayLive

Reference

5.2.2.12. UIDInfoMax

Object	**PSAPI Control**
Property	**UIDInfoMax**
long	UIDInfoMax

Description

Store the maximum number of UID that recorder can issue, which is gotten by calling GetUIDInfo method.

Value

	0 : Not supported the getting UID information. 1 to 16 : Maximum number of UID	This property is only for the value acquisition.

Return value

None

Error

Note

Maximum number of UID depends on device model.

Model	Maximum number	Remarks
HD300	Not support.	Getting information is not supported. Maximum number of UID is 8
ND200	Not support.	Getting information is not supported. Maximum number of UID is 4
ND300	Not support.	Getting information is not supported. Maximum number of UID is 8
ND400	16	Firmware version V3.10 or later can support the getting information.
NV200	4	Firmware version V1.40 or later can support the getting information.
NV250	4	Firmware version V1.00 or later can support the getting information.
NV300	8	Firmware version V1.02 or later can support the getting information.
NX100	16	Firmware version V1.00 or later can support the getting information.
NX200		
NX300		
NX400		
NX310	16	Firmware version V1.00 or later can support the getting information.
NX410		
NX510		
NU101	16	Firmware version V1.00 or later can support the getting information.
NU201		
NU300/301		
HD600/700	8	Firmware version V2.20 or later can support the getting information.

Sequence

Sample program code

Reference

5.2.2.13. UIDInfoUse

Object	**PSAPI Control**
Property	**UIDInfoUse**

long UIDInfoUse

Description

Store the number of UID which is in use, which is gotten by calling GetUIDInfo method.

Value

	0 : Not supported the getting UID information Or UID isn't used. 1 to 16 : Number of UID which is in use.	This property is only for the value acquisition.

Return value

None

Error

Note

Sequence

Sample program code

Reference

5.2.2.14. SIDInfoMode

Object	**PSAPI Control**
Property	**SIDInfoMode**
long	SIDInfoMode

Description

Store the information of StreamID support, which is gotten by calling GetSIDInfo method.

Value

	0 : Not supported StreamID mode. 1: Support StreamID mode.	This property is only for the value acquisition.

Return value

None

Error

Note

Sequence

Sample program code

Reference

5.2.2.15. SIDInfoMax

Object	**PSAPI Control**
Property	**SIDInfoMax**
long	SIDInfoMax

Description

Store the maximum number of StreamID that recorder can issue, which is gotten by calling GetSIDInfo method.

Value

	0 : Not supported the getting StreamID information. 1 to 64 : Maximum number of StreamID	This property is only for the value acquisition.

Return value

None

Error

Note

Maximum number of StreamID depends on device model.

Model	Maximum number	Remarks
HD300	Not support.	StreamID mode is not supported.
ND200	Not support.	StreamID mode is not supported.
ND300	Not support.	StreamID mode is not supported.
ND400	64	Firmware version V3.10 or later can support the getting information.
NV200	16	Firmware version V1.40 or later can support the getting information.
NV250	24	Firmware version V1.00 or later can support the getting information.
NV300	32	Firmware version V1.02 or later can support the getting information.
NX100	64	Firmware version V1.00 or later can support the getting information.
NX200		
NX300		
NX400		
NX310	64	Firmware version V1.00 or later can support the getting information.
NX410		
NX510		
NU101	64	Firmware version V1.00 or later can support the getting information.
NU201		
NU300/301		
HD600/700	64	Firmware version V2.20 or later can support the getting information.

Sequence

Sample program code

Reference

5.2.2.16. SIDInfoUse

Object	**PSAPI Control**
Property	**SIDInfoUse**

long SIDInfoUse

Description

Store the number of StreamID which is in use, which is gotten by calling GetSIDInfo method.

Value

	0 : Not supported the getting StreamID information. Or StreamID isn't used. 1 to 64 : Number of StreamID which is in use.	This property is only for the value acquisition.

Return value

None

Error

Note

Sequence

Sample program code

Reference

5.2.2.17. SecureCommunicationMode

Object	**PSAPI Control**
Property	**SecureCommunicationMode**
long	SecureCommunicationMode

Description

Set the HTTP Communication protcol（HTTP or HTTPS）to PS-API.
Get the HTTP Communication protcol（HTTP or HTTPS）to PS-API

Value

0 : HTTP 1 : HTTPS	Set the HTTP protcol. Default value is 0.

Return value

None

Error

Note

・Set target device to HTTPS settings. (*Refer to each device manuals)
・A Self-signed Certificate or CA certificate is installed on the target device, only HTTP communication will be encrypted.

・Confirm the following settings in Control Panel - All Control Panel Items - Internet Options - Advanced “Use SSL2.0”,”Use SSL3.0” ,”Use TLS1.0” ,”Use TLS1.1” is unchecked.
・"TLS1.3" is only compatible with Windows 11.

・HTTPS is supported for the following communications.
(1) CGI Send and receive
(2) JPEG stream reception（including audio reception / transmission）
(3) H264/H265/MPEG4 stream reception in InternetMode（including audio reception / transmission）
・FTPS protocol is not supported.

・Use HTTPPort property for Port number of HTTPS.
Set HTTPPort property according to the HTTPS port number of the connecting device.
・Set this property before Open method.

・HTTPS communication availability for each device type is below.

DeviceType	HTTPS communication	Remarks
0 : HD300	×	
1 : NWDR	×	
2 : Camera	○	Below models are not deprecated NP502/SP300/SF330/SP100/SW350/SC384/SC385/SF340/SF135/SW155/SW396/SW316/SC386/SP509/SW559/SF539/SF549/SF438/SW458/SF448/SW598/SP307/SF337/SW115/SW374/SW397/SF105A/SC384B
3 : Encoder	○	Below models are not deprecated GXE100
4 : HD600/700	×	
6 : NX Serise	○	

・When setting HTTPS, if there is something abnormal such as slow method response (over 10 seconds), please update the driver of Network adapter with Windows update。

Sequence

Sample program code

6.17. SSL

Reference

5.2.2.18. CertificateVerifyEnable

Object	**PSAPI Control**
Property	**CertificateVerifyEnable**
long	CertificateVerifyEnable

Description

Set whether to check the certificate of the connecting device during HTTPS communication to PS-API.
Get whether to check the certificate of the connecting device during HTTPS communication from PS-API.

Value

0 : don’t check the certificate 1 : check the certificate	Set whether to check certificate of the connecting device. Default value is 0.

Return value

None

Error

Note

For the settings the certificate of the connecting device and installation of the certificate to client PC, please refer to the manual of the target device(camera/recoder).

- Set this property before Open method.
- If this property is "1", check the following items
  1) Is the certificate registered in the "Trusted Root Certification Authorities" of client PC ?.
  2) Has the validity period of the certificate expired ?.

- HTTPS communication is possible even if this property has an value of "0".

Sequence

Sample program code

6.17. SSL

Reference

5.2.2.19. OnErrorEnable

Object	**PSAPI Control**
Property	**OnErrorEnable**

long OnErrorEnable

Description

Set/Get the setting whether use the OnError event or not.

Value

0 : Not use event Except 0 : Use event	Default value is 0.

Return value

None

Error

Note

Sequence

Sample program code

Reference

5.2.3. Event

5.2.3.1. OnError

Object	**PSAPI Control**
Event	**OnError**

```
void    OnError(
                long    errorCode,
                BSTR    description
                );
```

Description

The OnError notification function is to pass error code from PS-API to the application.

Argument

errorCode	Negative value	Error code number
description	Character strings	Detailed error description *** This parameter is valid in the inside of OnError function. When OnError function is finished, this memory is freed.**

Return value

None

Error

Note

Please don’t use PS-API functions in the notified event.

Sequence

Sample program code

Reference

5.3. Device Group

5.3.1. Method

5.3.1.1. GetDeviceStatus

Object	**PSAPI Control**
Method	**GetDeviceStatus**

```
long    GetDeviceStatus(
                    long    channel
                    );
```

Description

Get the connection status of the device which is connected with the recording device.
In case of a NWDR, get the status of the device that connect to the specified channel.
In case of HD300, NV200, NV250, NV300, NX Series, a network camera, an encoder or HD600/700, get the status of device itself.

Argument

channel	1 : Network Camera 1 to 4 : Encoder NX100, NU101 1 to 8 : NU201 1 to 16 : ND200, HD300, HD600/700, NU300/301 1 to 24 : NV200, NV250 1 to 32 : ND300, NV300, NX200, NX300, NX310 1 to 64 : ND400, NX410 1 to 128 : NX400, NX510	Specify the video channel.

Return value

0	There is no device on the specified channel
1	Does properly connect to the device.
2	Does not properly connect to the device.

Error

Get the error information by OnError event.

Note

In case of ND400, NV200, NV250, NV300, NX Series and HD600/700,
there is another way to get the connection status.For details , refer to 5.3.1.11GetInfoString()

Sequence

Sample program code

Reference

5.3.1.2. RecCtrl

Object	**PSAPI Control**
Method	**RecCtrl**

```
long    RecCtrl(
                long    channel,
                long    command,
                long    mode,
                );
```

Description

Turn on and off the manual recording for the recorder with manual recording function.

Argument

channel	0 : All channels 1 to 16 : ND200, HD300 HD600/700 1 to 32 : ND300 1 to 64 : ND400	Specify the video channel. When it set to zero, it refers to all channels. If specifying the channel for HD300, ND200, ND300 or HD600/700, all channels recording will be started.
command	0 : Turn off recording 1 : Turn on recording	
mode	0 : Blocking Except 0 : Non-blocking	Blocking mode. When calling this method with non-blocking mode, OnRecStatusCB needs to have implementation, and OnRecStatusCBEnable needs to be set to “1” to get a result.

Return value

0	Success
Except 0	Error code

Error

Error is defined by the return value.
Get the error information by OnError event.

Note

NV200, NV250, NV300 and ,NX Series doesn't support manual recording.

Sequence

6.8 RecCtrl

Sample program code

[Visual Basic 2012] ..¥Sample Program¥PS-API¥Visual Basic 2012¥008_RecCtrl
[Visual C# 2012] ..¥Sample Program¥PS-API¥Visual CSharp¥ 008_RecCtrl
[HTML] ..¥Sample Program¥PS-API¥HTML¥008_RecCtrl

Reference

5.3.1.3. GetRecCtrlStatus

Object	**PSAPI Control**
Method	**GetRecCtrlStatus**

```
long    GetRecCtrlStatus(
                long    channel
                );
```

Description

Get recording status.

Argument

channel	0 : All channels 1 to 4 : NX100, NU101 1 to 8 : NU201 1 to 16 : ND200, HD300, HD600/700, NU300/301 1 to 24 : NV200, NV250 1 to 32 : ND300, NV300, NX200, NX300, NX310 1 to 64 : ND400, NX410 1 to 128 : NX400, NX510	Specify the video hannel. When it set to zero, it refers to all channels. When specifying “0 (All channels)”, if only one channel is in recording status, the return value is “In recording”.

Return value

	[Specified a channel]
-1	Fail to get status.
0	OFF
1	Manual Recording
2	Event Recording
3	Schedule Recording
4	Emergency Recording
	[Specified All channels]
-1	Fail to get status.
0	OFF
1	In recording

Error

Get the error information by OnError event.

Note

In case of NWDR, NX Series, if a camera is not registered on the specified channel, GetRecCtrlStatus returns 0.
NV200, NV250, NV300 and NX Series doesn't support manual recording.

Sequence

Sample program code

Reference

5.3.1.4. Search

Object	**PSAPI Control**
Method	**Search**

```
long    Search(
                long    channel,
                BSTR    startTimeDate,
                BSTR    endTimeDate,
                long    type,
                long    mode
                );
```

Description

Search the recording data on a target recording device.
The search results are set to the SearchResult property.
Time zone information is NOT included in search results.

Argument

channel	0 : All channels 1 to 4 : NX100, NU101 1 to 8 : NU201 1 to 16 : ND200, HD300, HD600/700, NU300/301 1 to 24 : NV200, NV250 1 to 32 : ND300, NV300, NX200, NX300, NX310 1 to 64 : ND400, NX410 1 to 128 : NX400, NX510	Specify the video channel. When it set to zero, it refers to all channels. When it set to zero and SearchMultiChMask property is set the value, Search method works with the channels that is specified by SearchMultiChMask property.
startTimeDate	yyyy/mm/dd hh:mm:ss	Search the recording data that started recording after the specified time.
endTimeDate	yyyy/mm/dd hh:mm:ss	Search the recording data that started recording before the specified time.

Argument

eventType

Bit 0 to Bit 14 :

Bit 0 : Emergency (EMR)
Bit 1 : Manual (MAN)
Bit 2 : Schedule (SCH)
Bit 3 : Terminal (TRM)
Bit 4 : Command alarm (COM)
Bit 5 : Camera site alarm (CAM/SITE)
* In case of HD300, Bit5 is VMD.
Bit 6 : SD Backup (SD)
Bit 7 : Video Loss (LOSS)
Bit 8 : VMD alarm (VMD)

Bit 9 : Motion alarm (CMTN)
Bit 10 : Loitering alarm (CSTY)
Bit 11 : Removal alarm (CRMV)
Bit 12 : Scene change alarm (CSCD)
Bit 13 : Terminal alarm (CTRM)
Bit 14 : Direction alarm (CDRT)

Bit 15 to Bit 32 : Reserved

Specify the recording event kind by 32 digit binary.

Bit	HD300	ND200 ND300 ND400	NV200 NV250 NV300	HD600 HD700	NX series
0	EMR	EMR	-	EMR	**EMR**
1	MAN	MAN	-	MAN	**-**
2	SCH	SCH	SCH	SCH	**SCH**
3	TRM	TRM	TRM	TRM	**TRM**
4	COM	COM	COM	COM	**COM**
5	**(VMD)**	**CAM**	**CAM**	**SITE**	**CAM**
6	-	**SD**	-		**SD**
7	**LOSS**	-	-	**LOSS**	-
8	**VMD**	-	-	**VMD**	-
9	-	-	-	**CMTN**	-
10	-	-	-	**CSTY**	-
11	-	-	-	**CRMV**	-
12	-	-	-	**CSCD**	-
13	-	-	-	**CTRM**	-
14	-	-	-	**CDRT**	-

Bit map format

MSB	-	-		-	-	-	LSB
0	0	0	…	0	0	0	0
Bit	Bit	Bit	…	Bit	Bit	Bit	Bit
31	30	29		3	2	1	0

e.g. Emergency + Terminal
[Binary] 0001001 ---> type = 9

Except for NX Series, SD backup search and the other type search cannot be used together at the same time.
If specifying "1" to the other bits, SD backup are ignored.
In case of NWDR and NX Series, Bit7 is ignored if it is set to “1”.
In case of HD300, Bit6 is ignored if it is set to “1”.
In case of HD300, Bit5 or Bit8 is VMD alarm event search.

Argument

mode	0 : Blocking Except 0 : Non-blocking	Blocking mode When calling this method with non-blocking mode, OnSearchCB needs to have implementation, and OnSearchCBEnable needs to be set to “1” to get a result.

Return value

0	Success
Except 0	Error code

Error

Error is defined by the return value.
Get the error information by OnError event.

Note

In case that Search method is called during the network playback or the local file playback, please stop the network playback and the local file playback before calling Search method.
The maximum number of search result count is 3000.
When TRM/CMD/CAM/SITE/VMD/LOSS/CMTN/CSTY/CRMV/CSCD/CTRM/CDRT are specified in search condition, all event pre recording data that exist between the specified time are included in the search result list.
For NX100, NX200, NX300 and NX400, when NXStreamNumber property is set to '2', the sub-stream recording is searched.
The sub-stream recording supports H.265, H.264.

When the "HDD Standby Control" setting is "ON" in the NX Series, please specify the duration between startTimeDate and endTimeDate within 120 minutes.

Sequence

Sample program code

Reference

5.3.1.5. SearchEx

Object	**PSAPI Control**
Method	**SearchEx**

```
long    SearchEx(
                long    channel,
                BSTR    startTimeDate,
                BSTR    endTimeDate,
                long    type,
                long    mode
                );
```

Description

Search the recording data on a target recording device.
The search results are set to the SearchResult property.
Time zone information is included in search results.

Argument

channel	0 : All channels 1 to 4 : NX100, NU101 1 to 8 : NU201 1 to 16 : ND200, HD300, HD600/700, NU300/301 1 to 24 : NV200, NV250 1 to 32 : ND300, NV300, NX200, NX300, NX310 1 to 64 : ND400, NX410 1 to 128 : NX400, NX510	Specify the video channel. When it set to zero, it refers to all channels. When it set to zero and SearchMultiChMask property is set the value, Search method works with the channels that is specified by SearchMultiChMask property.
startTimeDate	yyyy/mm/dd hh:mm:ss	Search the recording data that started recording after the specified time.
endTimeDate	yyyy/mm/dd hh:mm:ss	Search the recording data that started recording before the specified time.

Argument

eventType

Bit 0 to Bit 14 :

Bit 0 : Emergency (EMR)
Bit 1 : Manual (MAN)
Bit 2 : Schedule (SCH)
Bit 3 : Terminal (TRM)
Bit 4 : Command alarm (COM)
Bit 5 : Camera site alarm (CAM/SITE)
* In case of HD300, Bit5 is VMD.
Bit 6 : SD Backup (SD)
Bit 7 : Video Loss (LOSS)
Bit 8 : VMD alarm (VMD)

Bit 9 : Motion alarm (CMTN)
Bit 10 : Loitering alarm (CSTY)
Bit 11 : Removal alarm (CRMV)
Bit 12 : Scene change alarm (CSCD)
Bit 13 : Terminal alarm (CTRM)
Bit 14 : Direction alarm (CDRT)

Bit 15 to Bit 32 : Reserved

Specify the recording event kind by 32 digit binary.

Bit	HD300	ND200 ND300 ND400	NV200 NV250 NV300	HD600 HD700	NX series
0	EMR	EMR	-	EMR	**EMR**
1	MAN	MAN	-	MAN	**-**
2	SCH	SCH	SCH	SCH	**SCH**
3	TRM	TRM	TRM	TRM	**TRM**
4	COM	COM	COM	COM	**COM**
5	**(VMD)**	**CAM**	**CAM**	**SITE**	**CAM**
6	-	**SD**	-		**SD**
7	**LOSS**	-	-	**LOSS**	-
8	**VMD**	-	-	**VMD**	-
9	-	-	-	**CMTN**	-
10	-	-	-	**CSTY**	-
11	-	-	-	**CRMV**	-
12	-	-	-	**CSCD**	-
13	-	-	-	**CTRM**	-
14	-	-	-	**CDRT**	-

Bit map format

MSB	-	-		-	-	-	LSB
0	0	0	…	0	0	0	0
Bit	Bit	Bit	…	Bit	Bit	Bit	Bit
31	30	29		3	2	1	0

e.g. Emergency + Terminal
[Binary] 0001001 ---> type = 9

Except for NX Series, SD backup search and the other type search cannot be used together at the same time.
If specifying "1" to the other bits, SD backup are ignored.
In case of NWDR and NX Series, Bit7 is ignored if it is set to “1”.
In case of HD300, Bit6 is ignored if it is set to “1”.
In case of HD300, Bit5 or Bit8 is VMD alarm event search.

Argument

mode	0 : Blocking Except 0 : Non-blocking	Blocking mode When calling this method with non-blocking mode, OnSearchExCB needs to have implementation, and OnSearchExCBEnable needs to be set to “1” to get a result.

Return value

0	Success
Except 0	Error code

Error

Error is defined by the return value.
Get the error information by OnError event.

Note

In case that Search method is called during the network playback or the local file playback, please stop the network playback and the local file playback before calling Search method.
The maximum number of search result count is 3000.
When TRM/CMD/CAM/SITE/VMD/LOSS/CMTN/CSTY/CRMV/CSCD/CTRM/CDRT are specified in search condition, all event pre recording data that exist between the specified time are included in the search result list.
For NX100, NX200, NX300 and NX400, when NXStreamNumber property is set to '2', the sub-stream recording is searched.

The sub-stream recording supports H.265, H.264.

When the "HDD Standby Control" setting is "ON" in the NX Series, please specify the duration between startTimeDate and endTimeDate within 120 minutes.

Sequence

6.7 Search

Sample program code

[Visual Basic 2012] ..¥Sample Program¥PS-API¥Visual Basic 2012¥007_Search
[Visual C# 2012] ..¥Sample Program¥PS-API¥Visual CSharp¥ 007_Search
[HTML] ..¥Sample Program¥PS-API¥HTML¥007_Search

Reference

5.3.1.6. VmdSearchEx

Object	**PSAPI Control**
Method	**VmdSearchEx**

```
long    VmdSearchEx(
                long    channel,
                BSTR    startTimeDate,
                BSTR    endTimeDate,
                long    mask,
                long    aSensitivity,
                long    axTopLeft,
                long    ayTopLeft,
                long    axBottomRight,
                long    ayBottomRight,
                long    bSensitivity,
                long    bxTopLeft,
                long    byTopLeft,
                long    bxBottomRight,
                long    byBottomRight,
                long    cSensitivity,
                long    cxTopLeft,
                long    cyTopLeft,
                long    cxBottomRight,
                long    cyBottomRight,
                long    dSensitivity,
                long    dxTopLeft,
                long    dyTopLeft,
                long    dxBottomRight,
                long    dyBottomRight,
                long    imageWidth,
                long    imageHeight,
                long    mode
                );
```

Description

Do VMD search.
Time zone information is included in search results.

Argument

channel	1 to 4 : NX100, NU101 1 to 8 : NU201 1 to 16 : ND200, HD300, HD600/700, NU300/301 1 to 24 : NV200, NV250 1 to 32 : NV300, NX200, NX300, NX310 1 to 64 : ND400, NX410 1 to 128 : NX400, NX510	Specify the video channel.
startTimeDate	yyyy/mm/dd hh:mm:ss	Search the recording data that started recording after the specified time.
endTimeDate	yyyy/mm/dd hh:mm:ss	Search the recording data that started recording before the specified time.
mask	[HD300, HD600/700] 0 : 1 [second] 1 : 1 [minute] 2 : 1 [hour] 3 : 24 [hour] [NV200, NV250,NV300, NX Series] 0 : 1 [second] 1 : 1 [minute] 2 : 5 [minute] 3 : 10 [minute] [ND400] 0 – 3 : 1 [minute]	masking duration When the mask duration is set, any motion will not be detected for the set duration after a motion detection. Use the mask duration when it takes time to detect motion or when motion is detected frequently.
aSensitivity	0 : OFF 1 : Low 2 : Middle 3 : High	Sensitivity of area A In case of ND400, if any value (1, 2, or 3) is set, it works with same sensitivity.
axTopLeft	0 and over	X position of the top left corner of area A
ayTopLeft	0 and over	Y position of the top left corner of area A
axBottomRight	0 and over	X position of the bottom right corner of area A
ayBottomRight	0 and over	Y position of the bottom right corner of area A

Argument

bSensitivity	0 : OFF 1 : Low 2 : Middle 3 : High	Sensitivity of area B In case of ND400, if any value (1, 2, or 3) is set, it works with same sensitivity.
bxTopLeft	0 and over	X position of the top left corner of area B
byTopLeft	0 and over	Y position of the top left corner of area B
bxBottomRight	0 and over	X position of the bottom right corner of area B
byBottomRight	0 and over	Y position of the bottom right corner of area B
cSensitivity	0 : OFF 1 : Low 2 : Middle 3 : High	Sensitivity of area C In case of ND400, if any value (1, 2, or 3) is set, it works with same sensitivity.
cxTopLeft	0 and over	X position of the top left corner of area C
cyTopLeft	0 and over	Y position of the top left corner of area C
cxBottomRight	0 and over	X position of the bottom right corner of area C
cyBottomRight	0 and over	Y position of the bottom right corner of area C
dSensitivity	0 : OFF 1 : Low 2 : Middle 3 : High	Sensitivity of area D In case of ND400, if any value (1, 2, or 3) is set, it works with same sensitivity.
dxTopLeft	0 and over	X position of the top left corner of area D
dyTopLeft	0 and over	Y position of the top left corner of area D
dxBottomRight	0 and over	X position of the bottom right corner of area D
dyBottomRight	0 and over	Y position of the bottom right corner of area D
imageWidth	0 and over	Width of video displayed area.
imageHeight	0 and over	Height of video displayed area.
mode	0 : Blocking Except 0 : Non-blocking	Blocking mode

Return value

0	Success
Except 0	Error code

Error

Error is defined by the return value.
Get the error information by OnError event.

Note

ND200 and ND300 don’t support VMD search.
When using digital zoom function, please specify the positions that is translated to the once position.
In case that Search method is called during the network playback or the local file playback, please stop the network playback and the local file playback before calling Search method.
The maximum number of search result count is 200.
This function is not support the sub-stream recording of NX Series. When NXStreamNumber property is set to "2", it is the same operation as set to "1".

When the "HDD Standby Control" setting is "ON" in the NX Series, please specify the duration between startTimeDate and endTimeDate within 120 minutes.

Sequence

Sample program code

Reference

5.3.1.7. SearchCancel

Object	**PSAPI Control**
Method	**SearchCancel**

long SearchCancel();

Description

Cancel the executing Search/SearchEx/VmdSearchEx function.
The search result that are already gotten are stored to ISearchResult class and ISearchResultEx class.

Argument

None

Return value

0	Success
Except 0	Error code

Error

Error is defined by the return value.
Get the error information by OnError event.

Note

The canceled callback of Search method, SearchEx method and VmdSearchEx method is notified.
The Search method, SearchEx method and VmdSearchEx in the waiting queue are not canceled.

Sequence

Sample program code

Reference

5.3.1.8. GetDeviceLog

Object	**PSAPI Control**
Method	**GetDeviceLog**

```
BSTR    GetDeviceLog(
                long    type,
                long    maxCount
                );
```

Description

Get the recording device logs.

Argument

type	0 : Access Log 1 : Network Log 2 : Trouble Log 3 : Event Log	Log kind
maxCount	Maximum count of log wanted.	Specify maximum count of logs wanted. Please specify 1 or over. The maximum number of each logs depends on the target device's model.

Return value

Character Strings

```
Number1,TimeDate1,TimeZone1,isDST1,Protocol1,Msg1(CRLF)
Number2,                  :                  ,Protocol2,Msg2(CRLF)
Number3,                  :                  ,Protocol3,Msg3(CRLF)
                          :
```

Number*	*th Log number
TimeDate*	Time and date information of *th data (yyyy/mm/dd hh:mm:ss)
TimeZone*	Time zone information of *th data. (plus or minus, minutes scale) e.g. In case of GMT+9:00, TimeZone*=540
isDst*	DST mode of *th data. 0 : Normal, 1 : Summer time(DST)
Protocol*	Protocol information of *th data.
Msg*	Message information of *th data.

Error

Get the error information by OnError event.

Note

Sequence

Sample program code

Reference

5.3.1.9. GetDevTimeZone

Object	**PSAPI Control**
Method	**GetDevTimeZone**
BSTR	GetDevTimeZone( )

Description

Get the time zone and summer time IN/OUT table information from a target device.

Argument

None

Return value

timezone Return the time zone and summer time information..

timeZone,isDst(CRLF)
inTime1,outTime1(CRLF)
inTime2,outTime2(CRLF)
:
inTime9,outTime9(CRLF)

timeZone	Time zone (plus or minus, minutes scale) e.g. In case of GMT+9:00, m_lTimezone=540
isDst	Current DST mode 0 : Normal, 1 : Summer time(DST) 2 : Auto setting
inTime*	*th DST in time (yyyy/mm/dd hh:mm:ss)
outTime*	*th DST out time (yyyy/mm/dd hh:mm:ss)

Error

Get the error information by OnError event.

Note

Sequence

In case of HD300, the time zone information (timeZone) cannot be gotten. timeZone is set to 0.
In case of camera or encoder, the DST range list (stDstList) cannot be gotten.

Sample program code

Reference

5.3.1.10. GetDevCurrentInfo

Object	**PSAPI Control**
Method	**GetDevCurrentInfo**

long GetDevCurrentInfo();

Description

Get the device information and hold it.
When refer the gotten information, please use GetInfoString method.

Argument

None

Return value

0	Success
Except 0	Error code

Error

Error is defined by the return value.
Get the error information by OnError event.

Note

Depends on network load or environment, it takes about 10 seconds to finish this method.

Sequence

Sample program code

Reference

5.3.1.11. GetInfoString

Object	**PSAPI Control**
Method	**GetInfoString**

```
BSTR    GetInfoString(
                BSTR    key
                );
```

Description

Get a value from the kept information that was gotten by GetDevCurrentInfo method.

Argument

key	Character strings	Specify the key name.

Return value

Character strings	The information of device.

Error

Get the error information by OnError event.

Note

If there is no pair to specified key, this method returns an error and the value is set to ”” (empty string).
In case of ND400, NV200, NV250, NV300, NX Series and HD600/700, it is possible to get the connection status of the device , using the key “API_CAM_CONNECT_XXCH“ .

Key
“API_CAM_CONNECT_XXCH“ XX is channel number

value
[ND400, NV200, NV250, NV300, NX Series]
0: camera is not registration
1: camera is connected
2: camera is not connected

[HD600/700]
1: camera is connected
2: camera is not connected

Sequence

Sample program code

Reference

5.3.1.12. SetCameraTime

Object	**PSAPI Control**
Method	**SetCameraTime**

```
long    SetCameraTime (
                BSTR    timeDate,
                long    isDst
                        );
```

Description

Set specified time to a target device.

Argument

timeDate	yyyy/mm/dd hh:mm:ss	Specify a time and date character string to change the setting of a target device.
isDst	0:Normal 1:Summer time	Summer time information of the time that is specified to timeDate.

Return value

0	Success
Except 0	Error code

Error

Error is defined by the return value.
Get the error information by OnError event.

Note

Time display format is set to “24h” except for the following models
NP240 , NW484 , NS202 , NS950 , NP304 , NP502 , SP300 , SP100 , SC385 , SF340 , SW350 , SW559 , SW155 , SW316 , SC386 , SF539 , SF438 , SW458 , SP307 , SF337 , SW598 , SW158 SF138 , ST165 , SW175 , SW397 , SW374 , SW115 , SC384B series
GXE500 , GXE100 series .

Sequence

Sample program code

Reference

5.3.1.13. GetStatisticsData

Object	**PSAPI Control**
Method	**GetStatisticsData**

```
long    GetStatisticsData(
                    BSTR    startTimeDate,
                    BSTR    endTimeDate,
                    BSTR    fileName,
                    );
```

Description

Get statistics data from NV200 ,NV250, NV300, NX100, NX200, NX300, NX400.
When Statistical information license is available, the function of statistics download works.

Argument

startTimeDate	yyyy/mm/dd hh:mm:ss	Get the statistics data after the specified time.
endTimeDate	yyyy/mm/dd hh:mm:ss	Get the statistics data before the specified time. Please specify the duration between startTimeDate and endTimeDate less than a day. e.g.) startTimeDate = 2012/04/01 00:00:00 endTimeDate = 2012/04/01 23:59:59
fileName	Character strings (255 byte or less)	Specify a complete file path, and file name for storing the downloaded data.

Return value

0	Success
Except 0	Error code

Error

Error is defined by the return value.
Get the error information by OnError event.

Note

In case that GetStatisticsData method is called during the network playback, please stop the network playback before calling GetStatisticsData method.

Sequence

Sample program code

Reference

5.3.1.14. SetUIDPriority

Object	**PSAPI Control**
Method	**SetUIDPriority**

```
long    SetUIDPriority(
                long    command
                );
```

Description

Change the UID priority mode of ND400, NV200, NV250, NV300, NX Series and HD600/700.

Argument

command	0 : First-Come-First-Serve mode 1 : Last-Come-First-Serve mode	Specifiy the UID priority mode/

Return value

0	Success
Except 0	Error code

Error

Error is defined by the return value.
Get the error information by OnError event.

Note

[First-Come-First-Serve mode]
The user who accessed before is more prioritized.
The user who accessed after cannot access.

[Last-Come-First-Serve mode]
The user who accessed after is more prioritized.
The connection is cut into the user who was previously accessing.

When setting user access level, the connection for high level user is prioritized.

Sequence

Sample program code

Reference

5.3.2. Property

5.3.2.1. DeviceModel

Object	**PSAPI Control**
Property	**DeviceModel**

BSTR* DeviceModel

Description

Get a device manufacture model number.

Value

	Character Strings	Model number

Return value

None

Error

Note

Sequence

Sample program code

Reference

5.3.2.2. SearchMultiChMask

Object	**PSAPI Control**
Property	**SearchMultiChMask**
BSTR	SearchMultiChMask

Description

Set the channel information into PS-API when searching (Search/SearchEx) at multiple channel at the same time..
Get the channel information from PS-API.

Value

Character strings (128 bytes or less)	Specify ”1 : ON”, ”0 : OFF” for each channels. Default value is “” (empty string). When the channel argument of Search/SearchEx method is set to “0: all channels”, this property is valid. the channel argument of Search/SearchEx method is set to “0: all channels” and this property is set to NULL, all channels are the target of search. When specified 128 bytes character strings, the top (left side) of character is pair to channel 1, and the end (right side) of character is pair to channel 128. e.g. In case of searching channel 1, 3 and 6. "10100100……"

Return value

None

Error

Note

The specified value is shorter than the channel number that target device has, the lack value changes as “0 : OFF”.
The specified value is over the channel number that target device has, the over value is ignored.
All specified values that are pair to the target device‘s channel numbers are set to “0 : OFF”, Searcb/SearchEx method returns error.

Sequence

Sample program code

Reference

5.3.2.3. SearchResult

Object	**PSAPI Control**
Property	**SearchResult**

BSTR SearchResult

Description

The search result that is got by Search method is set.

Value

Character Strings search result

channel1,startTimeDate1,endTimeDate1,type1,audio1(CRLF)
channel2, : ,audio2(CRLF)
channel3, : ,audio3(CRLF)
:

channel*	The video channel number of *th data
startTimeDate*	The start recording date of *th data (yyyy/mm/dd hh:mm:ss)
endTimeDate*	The stop recording date of *th data (yyyy/mm/dd hh:mm:ss) If the recording stop date cannot be got, it is set to the recording start date.
type*	Recording event kind of *th data EMR : emergency event MAN : manual event SCH : schedule event TRM : terminal event COM : command alarm event VMD : VMD alarm event (HD300, HD600/700) CAM : camera site alarm event (NWDR, HD600/700, NX Series) SD : SD buckup (NWDR, NX Series) LOSS : Camera loss alarm event (HD300, HD600/700) CMTN : Motion alarm event(only HD600/700) CSTY : Loitering alarm event (only HD600/700) CRMV : Removal alarm event (only HD600/700) CSCD : Scene change alarm event (only HD600/700) CTRM : Terminal alarm event(only HD600/700) CDRT : Direction alarm event (only HD600/700)
audio*	Audio ON/OFF of *th data 0 : OFF 1 : ON

Return value

None

Error

Note

The recording stop date (endTimeDate*) and the audio data (audio*) is supported ND400 (Firmware version 1.20 or later). In case of unsupported device, the recording stop date is set to the same value as the recording start date and the audio mode is set to 0.

Sequence

Sample program code

Reference

5.3.2.4. SearchResultEx

Object	**PSAPI Control**
Property	**SearchResultEx**

BSTR SearchResultEx

Description

The search result that is got by SearchEx method is set.

Value

Character Strings search result

channel1,startTimeDate1,endTimeDate1,type1,audio1,timeZone1,timeMode1(CRLF)
channel2, : ,audio2,timeZone2,timeMode2(CRLF)
channel3, : ,audio3,timeZone3,timeMode3(CRLF)
:

channel*	The video channel number of *th data
startTimeDate*	The start recording date of *th data (yyyy/mm/dd hh:mm:ss)
endTimeDate*	The stop recording date of *th data (yyyy/mm/dd hh:mm:ss) If the recording stop date cannot be got, it is set to the recording start date.
type*	Recording event kind of *th data EMR : emergency event MAN : manual event SCH : schedule event TRM : terminal event COM : command alarm event VMD : VMD alarm event (HD300, HD600/700) CAM : camera site alarm event (NWDR, HD600/700, NX Series) SD : SD buckup (NWDR, NX Series) LOSS : Camera loss alarm event (HD300, HD600/700) CMTN : Motion alarm event(only HD600/700) CSTY : Loitering alarm event (only HD600/700) CRMV : Removal alarm event (only HD600/700) CSCD : Scene change alarm event (only HD600/700) CTRM : Terminal alarm event(only HD600/700) CDRT : Direction alarm event (only HD600/700)
audio*	Audio ON/OFF of *th data 0 : OFF 1 : ON
timeZone*	Time zone information of *th data for recorded video. (plus or minus, minutes scale) e.g. In case of GMT+9:00, m_lTimeZone=540
timeMode*	Time mode information of *th data for recorded video. Summer time (0:Normal, 1:Summer time)

Return value

None

Error

Note

The recording stop date (endTimeDate*), the audio data (audio*) and the time zone information(timeZone*) are supported ND400 (Firmware version 1.20 or later). In case of unsupported device, the recording stop date is set to the same value as the recording start date, and the audio mode and the timezone information are set to 0.

Sequence

6.7 Search

Sample program code

[Visual Basic 2012] ..¥Sample Program¥PS-API¥Visual Basic 2012¥007_Search
[Visual C# 2012] ..¥Sample Program¥PS-API¥Visual CSharp¥ 007_Search
[HTML] ..¥Sample Program¥PS-API¥HTML¥007_Search

Reference

5.3.2.5. OnDevStatusEnable

Object	**PSAPI Control**
Property	**OnDevStatusEnable**

long OnDevStatusEnable

Description

Set/Get the setting whether use the OnDevStatus event or not.

Value

0 : Not use event Default value is 0.
Except 0 : Use event

Return value

None

Error

Note

Sequence

Sample program code

Reference

5.3.2.6. OnRecStatusEnable

Object	**PSAPI Control**
Property	**OnRecStatusEnable**

long OnRecStatusEnable

Description

Set/Get the setting whether use the OnRecStatus event or not.

Value

	0 : Not use event Except 0 : Use event	Default value is 0.

Return value

None

Error

Note

Sequence

Sample program code

Reference

5.3.2.7. OnRecStatusCBEnable

Object	**PSAPI Control**
Property	**OnRecStatusCBEnable**

long OnRecStatusCBEnable

Description

Set/Get the setting whether use the OnRecStatusCB event or not.

Value

0 : Not use event Except 0 : Use event	Default value is 0.

Return value

None

Error

Note

Sequence

Sample program code

Reference

5.3.2.8. OnSearchCBEnable

Object	**PSAPI Control**
Property	**OnSearchCBEnable**

long OnSearchCBEnable

Description

Set/Get the setting whether use the OnSearchCB event or not.

Value

	0 : Not use event Except 0 : Use event	Default value is 0.

Return value

None

Error

Note

Sequence

Sample program code

Reference

5.3.2.9. OnSearchExCBEnable

Object	**PSAPI Control**
Property	**OnSearchExCBEnable**

long OnSearchExCBEnable

Description

Set/Get the setting whether use the OnSearchExCB event or not.

Value

0 : Not use event	Default value is 0.
Except 0 : Use event	

Return value

None

Error

Note

Sequence

Sample program code

Reference

5.3.3. Event

5.3.3.1. OnDevStatus

Object	**PSAPI Control**
Event	**OnDevStatus**

```
void    OnDevStatus(
                long    channel,
                long    status
                );
```

Description

The OnDevStatus notification function is to pass device connection status from PS-API to the application.
In case of a NWDR, get the status of the device that connect to the specified channel.
In case of HD300, NV200, NV250, NV300, NX Series, HD600/700 or an encoder, get the status of device itself.

Argument

channel	1 : Network Camera Encoder, HD300 HD600/700 1 to 4 : NX100, NU101 1 to 8 : NU201 1 to 16 : ND200, NU300/301 1 to 24 : NV200, NV250 1 to 32 : ND300, NV300, NX200, NX300 NX310 1 to 64 : ND400, NX410 1 to 128 : NX400, NX510	Specify the video channel.
status	0 : There is no device on the specified channel 1 : Does properly connect to the device. 2 : Does not properly connect to the device.	Specify a device connection status.

Return value

None

Error

Note

Please don’t use PS-API functions in the notified event.

Sequence

Sample program code

Reference

5.3.3.2. OnRecStatus

Object	**PSAPI Control**
Event	**OnRecStatus**

```
void    OnRecStatus (
                long    channel,
                long    status
                );
```

Description

The OnRecStatus notification function is to pass recorder status from PS-API to the application.

Argument

channel	1 to 4 : NX100, NU101 1 to 8 : NU201 1 to 16 : ND200, HD300, HD600/700, NU300/301 1 to 24 : NV200, NV250 1 to 32 : ND300, NV300, NX200, NX300, NX310 1 to 64 : ND400, NX410 1 to 128 : NX400, NX510	Specify the video channel.
status	0 : OFF 1 : Manual Recording 2 : Event Recording 3 : Schedule Recording 4 : Emergency Recording	Specify whether a reorder device in recording or not.

Return value

None

Error

Note

Please don’t use PS-API functions in the notified event.
NV200 ,NV250, NV300 and NX Series doesn’t support manual recording.

Sequence

Sample program code

Reference

5.3.3.3. OnRecStatusCB

Object	**PSAPI Control**
Event	**OnRecStatusCB**

```
void    OnRecStatusCB(
                long    status
                );
```

Description

Notify the recording status change to the application when RecCtrl method runs with non-blocking mode.

Argument

status	-1 : Fail to get status. 0 : OFF 1 : Manual Recording 2 : Event Recording 3 : Schedule Recording 4 : Emergency Recording	Specify whether a reorder device in recording or not.

Return value

None

Error

Note

Please don’t use PS-API functions in the notified event.

Sequence

Sample program code

Reference

5.3.3.4. OnSearchCB

Object	**PSAPI Control**
Event	**OnSearchCB**

void OnSearchCB();

Description

Notify the completion of search to the application when Search method runs with non-blocking mode.

Argument

None

Return value

None

Error

Note

Please don’t use PS-API functions in the notified event.

Sequence

Sample program code

Reference

5.3.3.5. OnSearchExCB

Object	**PSAPI Control**
Event	**OnSearchExCB**

void OnSearchExCB();

Description

Notify the completion of search to the application when SearchEx method or VmdSearch method runs with non-blocking mode.

Argument

None

Return value

None

Error

Note

Please don’t use PS-API functions in the notified event.

Sequence

Sample program code

Reference

5.4. Video Group

5.4.1. Method

5.4.1.1. GetFrameTime

Object	**PSAPI Control**
Method	**GetFrameTime**
BSTR	GetFrameTime( )

Description

Get the frame time and date of the current displaying image, when getting the live image of camera/recorder or the recording image of recorder.

Argument

None

Return value

FrameTime	Return the time information (time and date, time zone, summer time). e.g. Dec. 6th, 2008 00:30:00 pm in Japan 2008/12/06 12:30:00:000 +09:00 e.g. Aug. 6th, 2008 00:30:00 pm in US Eastern and summer time 2008/08/06 12:30:00:000 -05:00 DST

Error

Get the error information by OnError event.

Note

According to the target device, "time and date", "time zone" and "summer time" cannot be got.
Refer to the following table.

-PlayLive

	time and date	time zone	summer time
HD300	local time *4	00:00(Fixed)	summer time
NWDR	local time *4	time zone *2	summer time
Camera *1	local time	time zone *3	summer time
Encoder	local time	time zone *3	summer time
HD600/700	local time *4	time zone of HD600/700	summer time
NX Series	local time *4	time zone *2	summer time

*1 NP1000 doesn't support the frame time and date of the current displaying image.
Frame time is set to "".
*2 ND200, NV200, NV250, NV300, NX Seies : time zone of recorder
ND300, ND400 : time zone of camera
*3 In case of NTP setting of camera is manual, time zone is set to "00:00".
In case of NTP setting of camera is the sync mode with NTP server,
time zone is the network camera's time zone.
*4 In case of PlayLive with HD300, NWDR, HD600/700 or , NX Series,
milli-second is set to "000 (Fixed)".

-Play

	time and date	time zone	summer time
HD300	local time *5	00:00(Fixed)	summer time
NWDR	local time	time zone *3	summer time
HD600/700	local time	time zone of HD600/700	summer time
NX Series	local time	time zone *3	summer time

*3 ND200, NV200, NV250, NV300, NX Series : time zone of recorder
ND300, ND400 : time zone of camera
*5 In case of Play with HD300, milli-second is set to "000 (Fixed)".

-PlayFile

	time and date	time zone	summer time
HD300	local time *5	00:00(Fixed)	summer time
NWDR	local time *5	time zone *3	summer time
HD600/700	local time	time zone of HD600/700	summer time
NX Series	local time *5	time zone *3	summer time

*3 ND200, NV200, NV250, NV300, NX Series : time zone of recorder
ND300, ND400 : time zone of camera
*5 In case of PlayFile with n3r(JPEG) or h3r file, milli-second is set to "000 (Fixed)".

Sequence

Sample program code

Reference

5.4.1.2. PlayLive

Object	**PSAPI Control**
Method	**PlayLive**

```
long    PlayLive(
                long    channel,
                long    mode,
                );
```

Description

Start live video play.

Argument

channel	1 : Network Camera, GXE100 1 to 3 : S8573, X86530-Z2 1 to 4 : Encoder, X8570, X8571 S8574, X86531-Z2 NX100, NU101 1 to 8 : NU201 1 to 16 : ND200, HD300, HD600/700, NU300/301 1 to 24 : NV200, NV250 1 to 32 : ND300, NV300, NX200, NX300, NX310 1 to 64 : ND400, NX410 1 to 128 : NX400, NX510	Specify the video channel.
mode	0 : blocking Except 0 : Non-blocking	Blocking mode. When calling this method with non-blocking mode, OnPlayStatusCB needs to have implementation, and OnPlayStatusCBEnable needs to be set to “1” to get a result.

Return value

0	Success
Except 0	Error code

Error

Error is defined by the return value.
Get the error information by OnError event.

Note

When connecting to NWDR, NX Series and displaying MPEG-4/H.264/H.265 Live, please specify the different port number for receiving the MPEG-4/H.264/H.265 video stream to each channel.
About the setting of MPEG-4/H.264/H.265 port number, please refer to “5.4.2.1 MPEG4Port” or “5.4.2.2 H264Port”.
When connecting to NWDR, NX Series and displaying MPEG-4/H.264/H.265 Live, the response of starting Live may be late if the refresh rate is long.
In case of HD600/700, when playing Live with H264Resolution set to 320, OSD is not displayed.

When using 360-degree Network Camera, please refer to “4.7 About 360-degree Network Camera”.

In case H.264/H.265 video is not display, please try setting as bellow.
(1)Set DecResolutionMode property to 3.
(2)Set H264Resolution property smaller than video stream resolution it has being receiving.(*However, the resolution will be low.)

If a network fault occurs during Internet mode live, even if the network fault recovery, you may not hear audio.In case make audio hear, please execute PlayLive again.

Sequence

6.1 PlayLive

Sample program code

[Visual Basic 2012] ..¥Sample Program¥PS-API¥Visual Basic 2012¥001_PlayLive
[Visual C# 2012] ..¥Sample Program¥PS-API¥Visual CSharp¥ 001_PlayLive
[HTML] ..¥Sample Program¥PS-API¥HTML¥001_PlayLive

Reference

5.4.1.3. Play

Object	**PSAPI Control**
Method	**Play**

```
long    Play(
            long    channel,
            BSTR    timeDate,
            long    mode
            );
```

Description

Start recorded video play.

Argument

channel	1 to 4 : NX100, NU101 1 to 8 : NU201 1 to 16 : ND200, HD300, HD600/700, NU300/301 1 to 24 : NV200, NV250 1 to 32 : ND300, NV300, NX200, NX300, NX310 1 to 64 : ND400, NX410 1 to 128 : NX400, NX510	Specify the video channel.
timeDate	yyyy mm dd hh mm ss Empty string	Specify a time and date character string for the recorded video playback. If “NULL” or “” (empty string). is specified, PS-API skip to the latest recording time and start playing.
mode	0 : blocking Except 0 : Non-blocking	Blocking mode. When calling this method with non-blocking mode, OnPlayStatusCB needs to have implementation, and OnPlayStatusCBEnable needs to be set to “1” to get a result.

Return value

0	Success
Except 0	Error code

Error

Error is defined by the return value.
Get the error information by OnError event.

Note

In case of HD300, it is necessary that the total recording frame rate of all playback stream is 15 ips or less.
If the total is over 15 ips, the playback isn't smooth.

If specify the empty string to timeDate, playback starts from the following point.
Time between the starting point and the record terminal depends on the device setup. The default value is 30 second(except for NX Series), 15 second(in case of NX Series).
However if you repeatedly execute Play method on this setting in the NX Series, audio might not be heared.

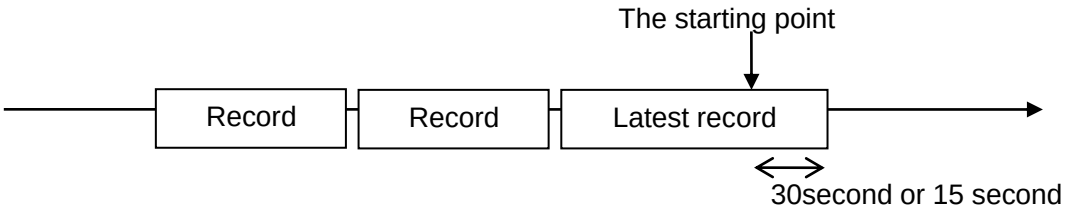

In the case a NX Series by designating date & time, playback may start from a point several seconds before or after the designated date & time.

In case H.264/H.265 video is not display, please try setting as bellow.
(1)Set DecResolutionMode property to 3.
(2)Set H264Resolution property smaller than video stream resolution it has being receiving.(*However, the resolution will be low.)

For NX100, NX200, NX300 and NX400, when SIDMode property is set to '0' and NXStreamNumber property is set to '2', the sub-stream recording is played.
The sub-stream recording supports H.265, H.264.

To execute Play mehod right after HttpMP4Download or HttpDownload method, execute PlayLive method once and then execute Play method again.

If there is a difference between "RcvAudioDec property value" and "Recorder's audio format setting or recording data format", multiple OnError may be notified when SetErrListener is enabled.

Sequence

6.2 Play

Sample program code

[Visual Basic 2012] ..¥Sample Program¥PS-API¥Visual Basic 2012¥002_Play
[Visual C# 2012] ..¥Sample Program¥PS-API¥Visual CSharp¥ 002_Play
[HTML] ..¥Sample Program¥PS-API¥HTML¥002_Play

Reference

5.4.1.4. PlayFile

Object	**PSAPI Control**
Method	**PlayFile**

```
long    PlayFile(
                BSTR   fileName,
                long   mode
                );
```

Description

Start video play from a specified video file.

Argument

fileName	Character strings (255 bytes or less)	Specify a file name and its full path for playing recorded video.
mode	0 : blocking Except 0 : Non-blocking	Blocking mode. When calling this method with non-blocking mode, OnPlayStatusCB needs to have implementation, and OnPlayStatusCBEnable needs to be set to “1” to get a result.

Return value

0	Success
Except 0	Error code

Error

Error is defined by the return value.
Get the error information by OnError event.

Note

If Open method or Connect method is executed during PlayFile working, PlayFile stops.
When doing PlayFile with the n3r file which has a password, please set password to “5.4.2.12 FilePassword” property.

Sequence

6.3 PlayFile

Sample program code

[Visual Basic 2012] ..¥Sample Program¥PS-API¥Visual Basic 2012¥003_PlayFile
[Visual C# 2012] ..¥Sample Program¥PS-API¥Visual CSharp¥ 003_PlayFile
[HTML] ..¥Sample Program¥PS-API¥HTML¥003_PlayFile

Reference

5.4.1.5. PlayControl

Object	**PSAPI Control**
Method	**PlayControl**

```
long    PlayControl(
                long    command,
                long    speed,
                long    mode
                );
```

Description

Control video play. (Forward, Pause, etc)

Argument

command	0 : stop play 1 : stop live 2 : stop file playback 3 : pause play 4 : forward play 5 : rewind play 6 : next frame 7:previous frame 8 : step fast forward 9 : step fast rewind	Specify the playback kind such as stop or play. When using 8: step fast forward, 9: step fast rewind, playback speed is stepped up one by one to 7th step. Please refer to NOTE about the detailed description of playback speed. When restart the playback after pause, please specify 4, 5, 8 or 9 to command. Please refer to NOTE about playback speed of each Step. 10 : next record and 11 : previous record is valid in network playback, is invalid in playback file. When using 10 : next record and 11 : previous record, playback direction and speed will be kept. Next record and previous record are not supported for HD300.
speed	1 : Step1 2 : Step2 3 : Step3 4 : Step4 5 : Step5 6 : Step6 7 : Step7	Specify the play speed. When command is set to “4” or “5”, speed is valid. To specify playback speed directly is not supported for HD300.

Argument

mode	0 : blocking Except 0 : Non-blocking	Blocking mode. When calling this method with non-blocking mode, OnPlayStatusCB needs to have implementation, and OnPlayStatusCBEnable needs to be set to “1” to get a result.

Return value

0	Success
Except 0	Error code

Error

Error is defined by the return value.
Get the error information by OnError event.

Note

The description of the playback speed is as follows.

[HD300] *1

Resolution	Step1	Step2	Step3	Step4	Step5	Step6	Step7
FRAME	x 1	x 2	x 4	x 8	x 16	x 32	x 48
FIELD	x 1	x 4	x 8	x 16	x 32	x 48	x96
SIF	x 1	x 8	x16	x 32	x 64	x128	x132

*1) To specify playback speed directly is not supported for HD300.

[NWDR]

	Step1	Step2	Step3	Step4	Step5	Step6	Step7
ND200 ND300 ND400 NV200 NV250 NV300	x 1	x 4	x 8	x 16	x 32	x 48	x96

[HD600/700]

	Step1	Step2	Step3	Step4	Step5	Step6	Step7
HD600/700	x 1	x 2	x 5	x 10	x 20	x 50	x100

[NX Series]

	Step1	Step2	Step3	Step4	Step5	Step6	Step7
NX Series	x 1	x 4	x 8	x 16	x 32	x 48	x96

Note

When using FastPlayMode = 1 (High rate mode, the description of the playback speed is as follows.

[NWDR]

	Step1	Step2	Step3	Step4	Step5	Step6	Step7
ND400 NV200 NV250 NV300	x 1	x 2	x 4	x 8	x 16	x 32	x48

[HD600/700]

	Step1	Step2	Step3	Step4	Step5	Step6	Step7
HD600/700	x 1	x 2	x 4	x 8	x 16	x 32	x48

[NX Series]

	Step1	Step2	Step3	Step4	Step5	Step6	Step7
NX Series	x 1	x 2	x 4	x 8	x 16	x 32	x48

In case of multi screen playback, please refer to the following notes.
When using “Next frame/Previous frame” with the records that are recorded with different rate, the playback cannot synchronize. Because the duration between frames of each channel is different.
When using “Next record/Previous record” with the records that are separated at different time, the playback cannot synchronize. Because the starting point of playback are different.

When the duration of the record which is recorded with MPEG-4/H.264/H.265 is shorter than the refresh interval (I-frame interval), next record and previous record in keeping direction and speed doesn't work.
In this case, please do pause before next record and previous record.

In the case a NX Series by designating frame, playback may start from a point several seconds before or after the designated frame.

Sequence

6.2 Play

Sample program code

[Visual Basic 2012] ..¥Sample Program¥PS-API¥Visual Basic 2012¥002_Play
[Visual C# 2012] ..¥Sample Program¥PS-API¥Visual CSharp¥ 002_Play
[HTML] ..¥Sample Program¥PS-API¥HTML¥002_Play

Reference

5.4.1.6. PlayControlByTime

Object	**PSAPI Control**
Method	**PlayControlByTime**

```
long    PlayControlByTime(
                    BSTR   timeDate,
                    long   isDst,
                    long   mode
                    );
```

Description

Jump to the specified date and time,
Playback direction and speed is hold..

Argument

timeDate	yyyy/mm/dd hh:mm:ss	Specify a time and date character string for the recorded video playback. If “NULL” or “” (empty string). is specified, error occurs.
isDst	0:Normal 1:Summer time	Summer time information of the time that is specified to timeDate.
mode	0 : blocking Except 0 : Non-blocking	Blocking mode.

Return value

0	Success
Except 0	Error code

Error

Error is defined by the return value.
Get the error information by OnError event.

Note

HD300 doesn’t support PlayControlByTime method.
In case of network playback, jump function is valid during displaying black image. When the network playback video is displayed, this method returns error.
In case of network playback, the specifiable time and date is the time between the current playback point and the beginning point of the next record.
In case of file playback, it can jump to any optional time by using this method.

Sequence

Sample program code

Reference

5.4.1.7. GetPlayStatus

Object	**PSAPI Control**
Method	**GetPlayStatus**

long GetPlayStatus( );

Description

Get current video play status.

Argument

None

Return value

-1	Stop Live or Play or Run with Non-blocking mode.
0	Live
1	Pause
2	Play
3	Preparing for Play

Error

Get the error information by OnError event.

Note

When the "HDD Standby Control" setting is "ON" in the NX Series, it may take time to play back.
In that case, "status = 3 (Preparing for Play)" may be notified.

Sequence

Sample program code

Reference

5.4.1.8. GetPlaySpeed

Object	**PSAPI Control**
Method	**GetPlaySpeed**

long GetPlaySpeed( );

Description

Get current video play speed.

Argument

None

Return value

	Get current play speed.
-1	Fail to get status.
1	Step1
2	Step2
3	Step3
4	Step4
5	Step5
6	Step6
7	Step7

Error

Get the error information by OnError event.

Note

The description of the playback speed is as follows.

[HD300] *1

Resolution	Step1	Step2	Step3	Step4	Step5	Step6	Step7
FRAME	x 1	x 2	x 4	x 8	x 16	x 32	x 48
FIELD	x 1	x 4	x 8	x 16	x 32	x 48	x96
SIF	x 1	x 8	x16	x 32	x 64	x128	x132

*1) To specify playback speed directly is not supported for HD300.

[NWDR]

	Step1	Step2	Step3	Step4	Step5	Step6	Step7
ND200 ND300 ND400 NV200 NV250 NV300	x 1	x 4	x 8	x 16	x 32	x 48	x96

[HD600/700]

	Step1	Step2	Step3	Step4	Step5	Step6	Step7
HD600/700	x 1	x 2	x 5	x 10	x 20	x 50	x 100

[NX Series]

	Step1	Step2	Step3	Step4	Step5	Step6	Step7
NX Series	x 1	x 4	x 8	x 16	x 32	x 48	x96

When using FastPlayMode = 1 (High rate mode, the description of the playback speed is as follows.

[NWDR]

	Step1	Step2	Step3	Step4	Step5	Step6	Step7
ND400 NV200 NV250 NV300	x 1	x 2	x 4	x 8	x 16	x 32	x48

[HD600/700]

	Step1	Step2	Step3	Step4	Step5	Step6	Step7
HD600/700	x 1	x 2	x 4	x 8	x 16	x 32	x48

[NX Series]

	Step1	Step2	Step3	Step4	Step5	Step6	Step7
NX Series	x 1	x 2	x 4	x 8	x 16	x 32	x48

Sequence

Sample program code

Reference

5.4.1.9. GetFrameRate

Object	**PSAPI Control**
Method	**GetFrameRate**

long GetFrameRate( );

Description

Get the set frame rate value on the recorder at the time of recording

Argument

None

Return value

-1	Fail to get status.
0	Frame rate [ips]
:	About the detailed description of frame rate, please refer to Note.
600	

Error

Get the error information by OnError event.

Note

According to target device, frame rate cannot be gotten.
Refer to the following table.

	PlayLive	Play	PlayFile
HD300	0(Fixed)	Recording rate	Recording rate
NWDR	JPEG:Live rate MPEG-4:0(Fixed) H.264:0(Fixed)	JPEG: Recording rate MPEG-4: 300(Fixed) *1 H.264:300(Fixed) *1	JPEG: Recording rate MPEG-4:300(Fixed) H.264:300(Fixed)
Camera	0(Fixed)		
Encoder	0(Fixed)		
HD600/700	0(Fixed)	0(Fixed)	H.264:300(Fixed)
NX Series	JPEG:Live rate H.264:0(Fixed) H.265:0(Fixed)	JPEG: Recording rate H.264:300(Fixed) *1 H.265:300(Fixed)	JPEG: Recording rate H.264:300(Fixed) H.265:300(Fixed)

*1 In case of I-frame (I-picture) of Play with ND200 and ND300,
frame rate of MPEG-4 and H.264 is set to 0 (fixed).

Sequence

Sample program code

Reference

5.4.1.10. GetPicturePosition

Object	**PSAPI Control**
Method	**GetPicturePosition**

long GetPicturePosition( );

Description

Get the position of the displayed picture except black panels.
The gotten position values are set to PicturePosTopX/ PicturePosTopY/ PicturePosBottomX/ PicturePosBottomX properties.

Argument

None

Return value

0	Success
Except 0	Error code

Error

Error is defined by the return value.
Get the error information by OnError event.

Note

The following points can be gotten as PicturePosTopX/ PicturePosTopY/ PicturePosBottomX/ PicturePosBottomX properties

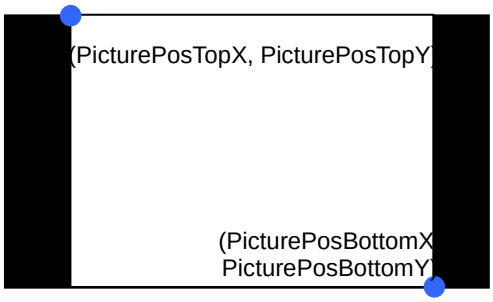

Figure **5-1** Black Panel on the Left and Right

Figure **5-2** Black Panel ont the Top and Bottom

Sequence

Sample program code

Reference

5.4.1.11. GetImageResolution

Object	**PSAPI Control**
Method	**GetImageResolution**

long GetImageResolution( );

Description

Get the displayed image resolution of live video and recorded video image.
The gotten resolution values are set to ImageResolutionWidth/ImageResolutionHeight properties.

Argument

None

Return value

0	Success
Except 0	Error code

Error

Error is defined by the return value.
Get the error information by OnError event.

Note

The gotten resolution depends on a target device and stream format.
Please refer to the following table.

	PlayLive	Play	PlayFile	DecodeImage
HD300	imageWidth : 640 imageHeight : 480	imageWidth : 640 imageHeight : 480	imageWidth : 640 imageHeight : 480	
NWDR	JPEG : Resolution of video stream MPEG-4 : Resolution of video stream H.264 : *1	JPEG : Resolution of video stream MPEG-4 : Resolution of video stream H.264 : *1	JPEG : Resolution of video stream MPEG-4 : Resolution of video stream H.264 : *1	Not support
Network camera	JPEG : Resolution of video stream MPEG-4 : Resolution of video stream H.264 : *1 H.265 : *1			Not support
Encoder	JPEG : Resolution of video stream MPEG-4 : Resolution of video stream H.264 : *1			Not support
HD600/700	H.264 : *1	H.264 : *1	H.264 : *1	Not support
NX Series	JPEG : Resolution of video stream H.264 : *1 H.265 : *1	JPEG : Resolution of video stream H.264 : *1 H.265 : *1	JPEG : Resolution of video stream H.264 : *1 H.265 : *1	Not support

*1 : Get the resolution of a displayed image.
However, when the upper limit of resolution (DecResolutionMode=3) is set, get the value set in the H264Resolution property.

When a black image is displayed, a resolution value is gotten depends on stream format.

	imageWidth	imageHeight
JPEG	10	10
MPEG-4	352	288
H.264	32	32
H.265	64	64

Sequence

Sample program code

Reference

5.4.1.12. ClearImage

Object	**PSAPI Control**
Method	**ClearImage**

void ClearImage( );

Description

Drawing area is painted over with background color specified by BackColor property.
If using this method during Live and Play, error occurs.

Argument

None

Return value

None

Error

Get the error information by OnError event.

Note

Sequence

Sample program code

Reference

5.4.1.13. SaveJpegImage

Object	**PSAPI Control**
Method	**SaveJpegImage**

```
long    SaveJpegImage(
                BSTR    fileName,
                );
```

Description

Store the displayed image in a jpeg format file.

Argument

fileName	Character strings (255 bytes or less)	Specify the completed file path.

Return value

0	Success
Except 0	Error code

Error

Error is defined by the return value.
Get the error information by OnError event.

Note

The size of a image gotten by snapshot is same as the size gotten by GetImageResolution.
Regarding on the overlay texts and frames by Overlay functions, position and size are different between the displayed image and snapshot.
When displaying video stream with kept aspect ratio, the black panels are not included in the gotten picture.

Sequence

Sample program code

Reference

5.4.1.14. GetJpegImage

Object	**PSAPI Control**
Method	**GetJpegImage**

IPictrure* GetJpegImage( );

Description

Get the displayed image with jpeg format.

Argument

None

Return value

IPicture	IPICTURE type

Error

Get the error information by OnError event.

Note

The size of a image gotten by snapshot is same as the size gotten by GetImageResolution.
Regarding on the overlay texts and frames by Overlay functions, position and size are different between the displayed image and snapshot.
When displaying video stream with kept aspect ratio, the black panels are not included in the gotten picture.

Sequence

Sample program code

Reference

5.4.1.15. SaveBitmapImage

Object	**PSAPI Control**
Method	**SaveBitmapImage**

```
long    SaveBitmapImage(
                        BSTR    fileName,
                        );
```

Description

Store the displayed image in a bitmap format file.

Argument

fileName	Character strings (255 bytes or less)	Specify the completed file path.

Return value

0	Success
Except 0	Error code

Error

Error is defined by the return value.
Get the error information by OnError event.

Note

The size of a image gotten by snapshot is same as the size gotten by GetImageResolution.
Regarding on the overlay texts and frames by Overlay functions, position and size are different between the displayed image and snapshot.
When displaying video stream with kept aspect ratio, the black panels are not included in the gotten picture.
This method can be used when the development environment is installed.
If the development environment is not installed, please use SaveJpegImage method.

Sequence

Sample program code

Reference

5.4.1.16. GetBitmapImage

Object	**PSAPI Control**
Method	**GetBitmapImage**

IPicture* GetBitmapImage( );

Description

Get the displayed image with bitmap format.

Argument

None

Return value

IPicture	IPICTURE type

Error

Get the error information by OnError event.

Note

The size of a image gotten by snapshot is same as the size gotten by GetImageResolution.
Regarding on the overlay texts and frames by Overlay functions, position and size are different between the displayed image and snapshot.
When displaying video stream with kept aspect ratio, the black panels are not included in the gotten picture.
This method can be used when the development environment is installed.
If the development environment is not installed, please use SaveBitMapImage method.

Sequence

Sample program code

Reference

5.4.1.17. TitleOperation

Object	**PSAPI Control**
Method	**TitleOperation**

```
long    TitleOperation(
                long    id,
                long    command,
                BSTR    text,
                long    xPosition,
                long    yPosition,
                long    align,
                BSTR    font,
                long    fontSize,
                long    foreColor,
                long    borderColor,
                long    style
            );
```

Description

Display text strings on the video image.

Argument

id	1 to 6	ID for management ID is shared by TitleOperation and TitleOperationEx.
command	0 : Non display 1 : Display	
text	Character strings (Half size character : 256 bytes or less Full size character : 128 bytes or less	Specify overlay character strings. .
xPosition	0 and over	X position of displayed text.
yPosition	0 and over	Y position of displayed text.
align	0 : Left and Top 1 : Center and Top 2 : Right and Top 3 : Left and Bottom 4 : Center and Bottom 5 : Right and Bottom	The placement of the text

font	Character strings (Half size character : 256 bytes or less Full size character : 128 bytes or less	Font name e.g.) “MS UI Gothic" "Century"
fontsize	8 to 128	Font size (pt)
foreColor	0 to 16777215	Text color The sum of R (Red), G (Green) and B (Blue) R, G and B are specified with the following value. R : 0 - 255 (0x000000 – 0x0000FF) G : 256 - 65280 (0x000100 – 0x00FF00) B : 65536 - 16711680 (0x010000 – 0xFF0000)
borderColor	0 to 16777215	Edge color The sum of R (Red), G (Green) and B (Blue) R, G and B are specified with the following value. R : 0 - 255 (0x000000 – 0x0000FF) G : 256 - 65280 (0x000100 – 0x00FF00) B : 65536 - 16711680 (0x010000 – 0xFF0000)
style	0 : Standard 1 : Bold 2 : Italic 3 : Bold and Italic	Text style

Return value

0	Success
Except 0	Error code

Error

Error is defined by the return value.
Get the error information by OnError event.

Note

Please specify xPosition and yPosition based on the PS-API control size. Cannot display the text out of PS-API control.
The text is not displayed on the image gotten by OnImage.

Sequence

Sample program code

Reference

5.4.1.18. TitleOperationEx

Object	**PSAPI Control**
Method	**TitleOperationEx**

```
long    TitleOperationEx(
                long    id,
                long    command,
                BSTR    text,
                long    xPosition,
                long    yPosition,
                long    align,
                BSTR    font,
                long    fontSize,
                long    foreColor,
                long    borderColor,
                long    style,
                long    transmissivity
              );
```

Description

Display text strings with transmissivity on the video image.

Argument

id	1 to 6	ID for management ID is shared by TitleOperation and TitleOperationEx.
command	0 : Non display 1 : Display	
text	Character strings (Half size character : 256 bytes or less Full size character : 128 bytes or less	Specify overlay character strings. .
xPosition	0 and over	X position of displayed text.
yPosition	0 and over	Y position of displayed text.
align	0 : Left and Top 1 : Center and Top 2 : Right and Top 3 : Left and Bottom 4 : Center and Bottom 5 : Right and Bottom	The placement of the text

font	Character strings (Half size character : 256 bytes or less Full size character : 128 bytes or less	Font name e.g.) “MS UI Gothic" "Century"
fontsize	8 to 128	Font size (pt)
foreColor	0 to 16777215	Text color The sum of R (Red), G (Green) and B (Blue) R, G and B are specified with the following value. R : 0 - 255 (0x000000 – 0x0000FF) G : 256 - 65280 (0x000100 – 0x00FF00) B : 65536 - 16711680 (0x010000 – 0xFF0000)
borderColor	0 to 16777215	Edge color The sum of R (Red), G (Green) and B (Blue) R, G and B are specified with the following value. R : 0 - 255 (0x000000 – 0x0000FF) G : 256 - 65280 (0x000100 – 0x00FF00) B : 65536 - 16711680 (0x010000 – 0xFF0000)
style	0 : Standard 1 : Bold 2 : Italic 3 : Bold and Italic	Text style
transmissivity	0 to 255	Transmissivity of overlay character strings. 0 (0x00) : transparent 127 (0x7F) : translucent 255 (0xFF) : opaque

Return value

0	Success
Except 0	Error code

Error

Error is defined by the return value.
Get the error information by OnError event.

Note

Please specify xPosition and yPosition based on the PS-API control size. Cannot display the text out of PS-API control.
The text is not displayed on the image gotten by OnImage.

Sequence

Sample program code

Reference

5.4.1.19. GetTitle

Object	**PSAPI Control**
Method	**GetTitle**

```
BSTR    GetTitle(
                long    id,
                );
```

Description

Get the text strings of specified ID.

Argument

id	1 to 6	ID for management

Return value

Character strings	Get the text string of specified ID. If getting value failed, it is set to “” (empty string).

Error

Error is defined by the return value.
Get the error information by OnError event.

Note

Sequence

Sample program code

Reference

5.4.1.20. BoxOperation

Object	**PSAPI Control**
Method	**BoxOperation**

```
long    BoxOperation(
                long    id,
                long    command
                long    color,
                long    size,
                long    xTopLeft,
                long    yTopLeft,
                long    xBottomRight,
                long    yBottomRight
                );
```

Description

Display frame lines on the video image.

Argument

id	1 – 9	ID for management ID is shared by BoxOperation and BoxOperationEx.
command	0 : Non display 1 : Solid line 2 : Dotted line 3 : Painting out	Type of frame
color	0 to 16777215	Frame color The sum of R (Red), G (Green) and B (Blue) R, G and B are specified with the following value. R : 0 - 255 (0x000000 – 0x0000FF) G : 256 - 65280 (0x000100 – 0x00FF00) B : 65536 - 16711680 (0x010000 – 0xFF0000)
size	1 to 5	Width of frame line
xTopLeft	0 and over	Specify the xposition for top-left corner of frame.
yTopLeft	0 and over	Specify the yposition for top-left corner of frame.
xBottomRight	0 and over	Specify the xposition for bottom-right corner of frame.
yBottomRight	0 and over	Specify the yposition for bottom-right corner of frame.

Return value

0	Success
Except 0	Error code

Error

Error is defined by the return value.
Get the error information by OnError event.

Note

Please specify xTopLeft, yTopLeft, xBottomRight and yBottomRight based on PS-API conrol size.
Cannot display the frame lines out of PS-API control .
The frame lines is not displayed on the image gotten by OnImage.

Sequence

Sample program code

Reference

5.4.1.21. BoxOperationEx

Object	**PSAPI Control**
Method	**BoxOperationEx**

```
long    BoxOperationEx(
                long    id,
                long    command
                long    color,
                long    size,
                long    xTopLeft,
                long    yTopLeft,
                long    xBottomRight,
                long    yBottomRight,
                long    transmissivity
                );
```

Description

Display frame lines with transmissivity on the video image.

Argument

id	1 – 9	ID for management ID is shared by BoxOperation and BoxOperationEx.
command	0 : Non display 1 : Solid line 2 : Dotted line 3 : Painting out	Type of frame
color	0 to 16777215	Frame color The sum of R (Red), G (Green) and B (Blue) R, G and B are specified with the following value. R : 0 - 255 (0x000000 – 0x0000FF) G : 256 - 65280 (0x000100 – 0x00FF00) B : 65536 - 16711680 (0x010000 – 0xFF0000)
size	1 to 5	Width of frame line
xTopLeft	0 and over	Specify the xposition for top-left corner of frame.
yTopLeft	0 and over	Specify the yposition for top-left corner of frame.
xBottomRight	0 and over	Specify the xposition for bottom-right corner of frame.
yBottomRight	0 and over	Specify the yposition for bottom-right corner of frame.

transmissivity	0 to 255	Transmissivity of overlay frame lines. 0 (0x00) : transparent 127 (0x7F) : translucent 255 (0xFF) : opaque

Return value

0	Success
Except 0	Error code

Error

Error is defined by the return value.
Get the error information by OnError event.

Note

Please specify xTopLeft, yTopLeft, xBottomRight and yBottomRight based on PS-API conrol size.
Cannot display the frame lines out of PS-API control .
The frame lines is not displayed on the image gotten by OnImage.

Sequence

Sample program code

Reference

5.4.1.22. BitmapOperationEx

Object	**PSAPI Control**
Method	**BitmapOperationEx**

```
long    BitmapOperationEx(
                long    id,
                long    command,
                BSTR    filename,
                long    xPosition,
                long    yPosition,
                long    maskColor,
                long    transmissivity
                );
```

Description

Display text strings with transmissivity on the video image.

Argument

id	1 to 4	ID for management
command	0 : Non display 1 : Display	
filename	Character strings (Half size character : 256 bytes or less)	Specify a file name and its full path for displaying on video image.
xPosition	0 and over	X position of displayed bitmap (top right corner).
yPosition	0 and over	Y position of displayed bitmap (top right corner)..
maskColor	-1 : No mask 0 to 16777215 : Mask	Mask color (undisplayed color) The sum of R (Red), G (Green) ad B (Blue) R, G and B are specified with the following value. R : 0 - 255 (0x000000 – 0x0000FF) G : 256 - 65280 (0x000100 – 0x00FF00) B : 65536 - 16711680 (0x010000 – 0xFF0000) No mask is specified with “-1 (0xFFFFFFFF)”.
transmissivity	0 to 255	Transmissivity of overlay bitmap image. 0 (0x00) : transparent 127 (0x7F) : translucent 255 (0xFF) : opaque

Return value

0	Success
Except 0	Error code

Error

Error is defined by the return value.
Get the error information by OnError event.

Note

Please specify xPosition and yPosition based on the PS-API control size. Cannot display the text out of PS-API control.
The text is not displayed on the image gotten by OnImage.

Sequence

Sample program code

Reference

5.4.1.23. DigitalZoomMove

Object	**PSAPI Control**
Method	**DigitalZoomMove**

```
long    DigitalZoomMove(
                    long    xPosition,
                    long    yPosition,
                    );
```

Description

Move the displayed area during working a digital zoom.

Argument

xPosition	Integer	Specify distance of x direction.
yPosition	Integer	Specify distance of y direction.

Return value

0	Success
Except 0	Error code

Error

Error is defined by the return value.
Get the error information by OnError event.

Note

Please specify the direction of x direction and y direction by using pixel scale value of displayed image with digital zoom.
If specified position is out of original image, the displayed area moves to an edge. When reaches to the edge, error occurs.
When displaying the video image with black panel and executing this method, the position and width of black panel is kept.

Sequence

Sample program code

Reference

5.4.1.24. GetDigitalZoomPosition

Object	**PSAPI Control**
Method	**GetDigitalZoomPosition**

long GetDigitalZoomPosition( );

Description

Get the current position of the displayed area in the original image with digital zoom.
Coordinate origin is the top-left corner position of original image, and the gotten value by this method is the top-left corner position of the displayed area.
The gotten position values are set to DigitalZoomPositionX/DigitalZoomPositionY properties.

Argument

None

Return value

0	Success
Except 0	Error code

Error

Error is defined by the return value.
Get the error information by OnError event.

Note

Sequence

Sample program code

Reference

5.4.1.25. SetIntelligentView
Not Supported

5.4.1.26. GetIntelligentView
Not Supported

5.4.1.27. SetIntelligentViewColor
Not Supported

5.4.1.28. GetIntelligentViewColor
Not Supported

5.4.1.29. SetIntelligentViewSize
Not Supported

5.4.1.30. GetIntelligentViewSize
Not Supported

5.4.1.31. SetIntelligentViewTrackTime
Not Supported

5.4.1.32. GetIntelligentViewTrackTime
Not Supported

5.4.1.33. MultiSyncPause

Object	**PSAPI Control**
Method	**MultiSyncPause**

long MultiSyncPause();

Description

When using PlayControl with multi screen, pause to synchronize with other screen.
When using the device which supports StreamID mode and setting On to SID mode, this method doesn't need to be executed.

Argument

None

Return value

0	Success
Except 0	Error code

Error

Error is defined by the return value.
Get the error information by OnError event.

Note

When using the device which supports StreamID mode and setting On to SID mode, this method doesn't need to be executed.

It is necessary to call MultiSyncTime method after executing this method.
If using multiple screen playback with shared UID without executing this method, PS-API works with unexpected behavior.

Sequence

Sample program code

Reference

5.4.1.34. MultiSyncTime

Object	**PSAPI Control**
Method	**MultiSyncTime**

```
long    MultiSyncTime(
                BSTR    syncTime,
                long    isDst
                );
```

Description

When using PlayControl with multi screen, set the sync time to synchronize with other screen. When using the device which supports StreamID mode and setting On to SID mode, this method doesn't need to be executed.

Argument

syncTime	yyyy/mm/dd hh:mm:ss	Specify a time and date character string for the base to synchronize. The strings must be terminated with null character. If "NULL" or "" (empty string). is specified, error occurs.
isDst	0:Normal 1:Summer time	Summer time information of the time that is specified to syncTime.

Return value

0	Success
Except 0	Error code

Error

Error is defined by the return value.
Get the error information by OnError event.

Note

When using the device which supports StreamID mode and setting On to SID mode, this method doesn't need to be executed.

It is necessary to call MultiSyncPause method before executing this method.
If using multiple screen playback with shared UID without executing this method, PS-API works with unexpected behavior.

Sequence

Sample program code

Reference

5.4.1.35. CamSnapShot

Object	**PSAPI Control**
Method	**CamSnapShot**

```
long    CamSnapShot (
                long    channel,
                long    imageMode
                );
```

Description

Get the snapshot image from NW camera or Encoder, and display it.

Argument

channel	1 : NW camera, GXE100 1 to 3 : S8573, X86530-Z2 1 to 4 : Encoder X8570, X8571 S8574, X86531-Z2	Specify the video channel It doesn't support network disk recorder and digital disk recorder
imageMode	0 : Fisheye image 1 : 320x240 or 320x180 2 : 640x480 or 640x360	Specify the mode of snapshot. The aspect ratio of the gotten image depends on the NW camera and encoder configuration.

Return value

0	Success
Except 0	Error code

Error

Error is defined by the return value.
Get the error information by OnError event.

Note

The NW camera that can get fisheye images with “imageMode=0” is as follows.

*SW458, SF448, SF438

When using mode “0” with NW camera or encoder other than above, the aspect ratio of the gotten image is the aspect ratio that is set for the live video transmission.

Sequence

Sample program code

Reference

5.4.1.36. SetCroppingRect

Object	**PSAPI Control**
Method	**SetCroppingRect**

```
long    SetCroppingRect (
                long    id,
                long    ltX,
                long    ltX,
                long    rbX,
                long    rbY
                );
```

Description

Set the Cropping area from the panorama area.
If enable the "5.4.2.43 CroppingEnabled", this setting will be reflected in the video.

Argument

id	1-5:Cropping frame	Cropping area id
ltX	integer	Specify the top-left X position of Cropping area.
ltY	integer	Specify the top-left Y position of Cropping area.
rbX	integer	Specify the bottom-right X position of Cropping area.
rbY	integer	Specify the bottom-right Y position of Cropping area. * Negative value can be set on XY position, but there is no images in the negative value area, so the area will be back ground color.

Return value

0	Success
Except 0	Error code

Error

Error is defined by the return value.
Get the error information by OnError event.

Note

The coordinates of the Cropping area should be specified the position in the panorama area which is set by “5.4.1.38 SetCroppingDrawRect” method, and the coordinate is based on the display area which is OCX control size.
When the coordinates is specified out of “id=0 area(panorama)” range, it will be displayed the back ground color on the screen.
The bottom-right position value shoud be bigget than top-left position value.
If need to display the frame line, please set the frame position by "5.4.1.43 SetCroppingMarker".

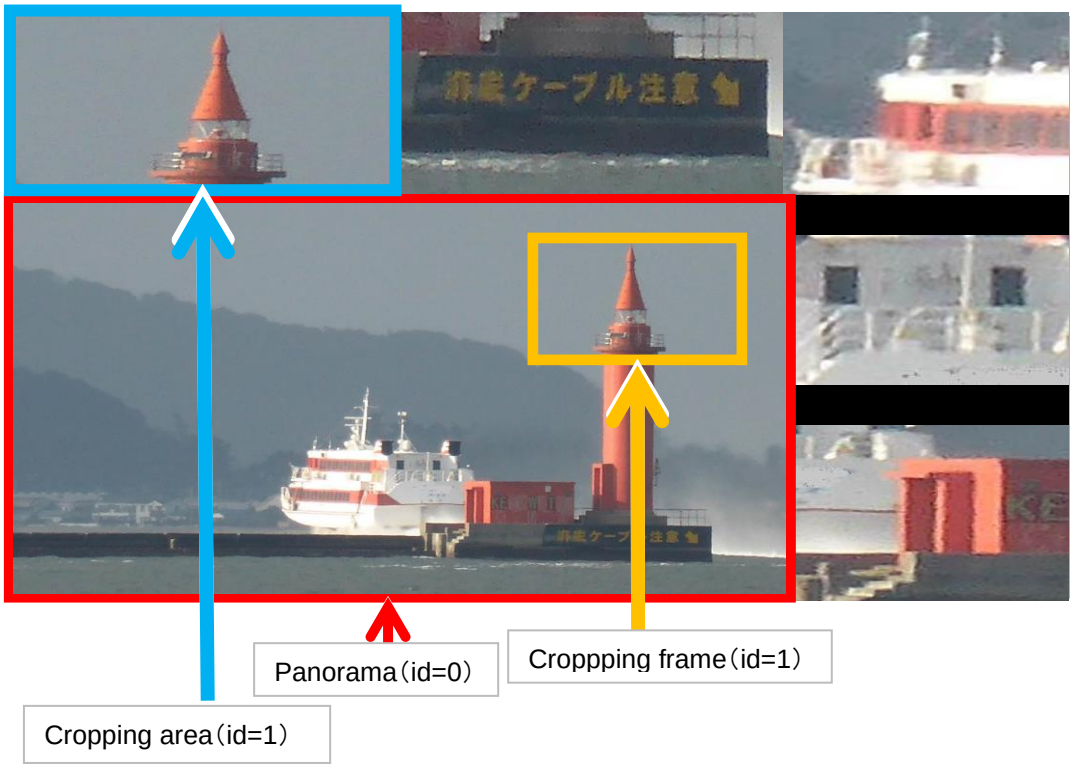

Sequence

6.15 Cropping

Sample program code

Reference

5.4.1.37. GetCroppingRect

Object	**PSAPI Control**
Method	**GetCroppingRect**

```
long    GetCroppingRect (
                long    id,
                );
```

Description

Get the Cropping Position.
The gotten values are set to CropRectLtX/ CropRectLtY/ CropRectRbX/ CropRectRbY properties.

Argument

id	1-5:Cropping area	Cropping area id

Return value

0	Success
Except 0	Error code

Error

Error is defined by the return value.
Get the error information by OnError event.

Note

Sequence

Sample program code

Reference

5.4.1.38. SetCroppingDrawRect

Object	**PSAPI Control**
Method	**SetCroppingDrawRect**

```
long    SetCroppingDrawRect (
                long    id,
                long    ltX,
                long    ltX,
                long    rbX,
                long    rbY
                );
```

Description

Set the drawing position of the panorama image and the cropping images which are specified by "5.4.1.36 SetCroppingRect".
When enable the "5.4.2.32 CroppingEnabled", this setting will be reflected in the video.

Argument

id	0 :Panorama image 1-5:Cropping frame	Cropping area id
ltX	integer	Specify the top-left X position of Cropping area.
ltY	integer	Specify the top-left Y position of Cropping area.
rbX	integer	Specify the bottom-right X position of Cropping area.
rbY	integer	Specify the bottom-right Y position of Cropping area. * Negative value can be set on XY position, but the negative value area will not be displayed.

Return value

0	Success
Except 0	Error code

Error

Error is defined by the return value.
Get the error information by OnError event.

Note

The coordinates of the Cropping area should be specified the position which is based on the display area which is OCX Control size.
If the drawing position is overlap, the video of the large value of id is displayed in the front.
The bottom-right position value shoud be bigget than top-left position value.

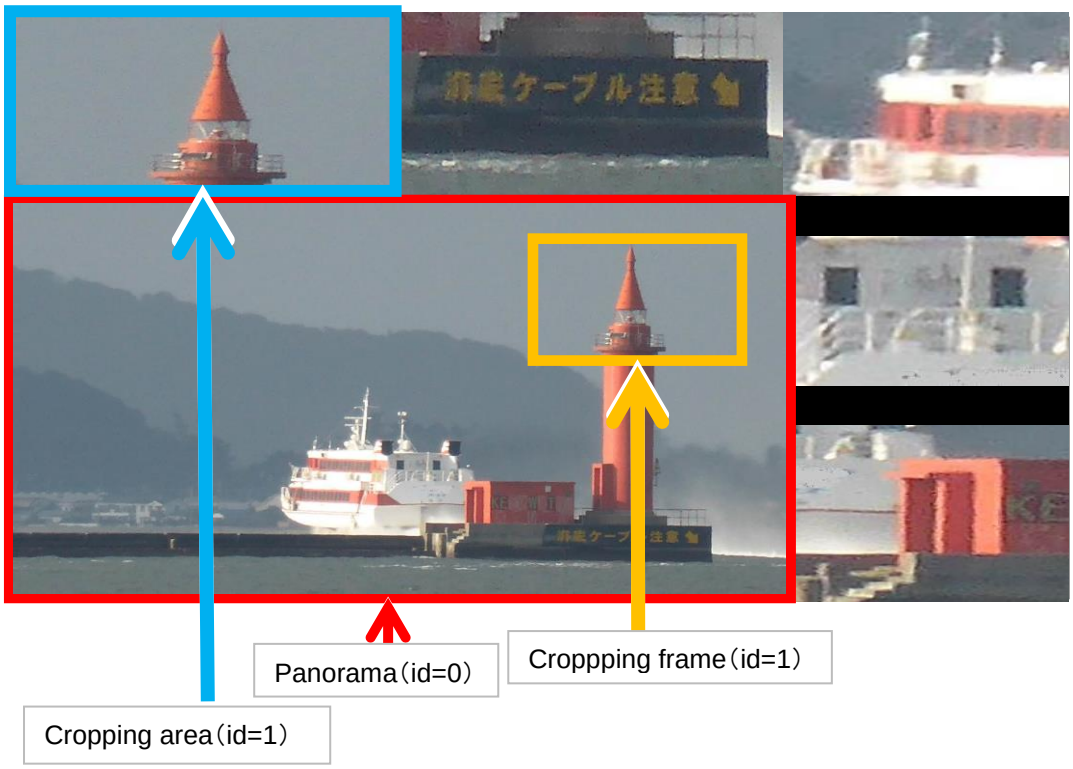

Sequence

6.15 Cropping

Sample program code

Reference

5.4.1.39. GetCroppingDrawRect

Object	**PSAPI Control**
Method	**GetCroppingDrawRect**

```
long    GetCroppingDrawRect (
                long    id,
                );
```

Description

Get the Draw Position in Cropping function.
The gotten values are set to CropDrawRectLtX/ CropDrawRectLtY/ CropDrawRectRbX/ CropDrawRectRbY properties.

Argument

id	0 :Full screen display area 1-5:Cropping area	Cropping area id

Return value

0	Success
Except 0	Error code

Error

Error is defined by the return value.
Get the error information by OnError event.

Note

Sequence

Sample program code

Reference

5.4.1.40. SetCroppingDrawEnabled

Object	**PSAPI Control**
Method	**SetCroppingDrawEnabled**

```
long    SetCroppingDrawRect (
                long    id,
                long    mode
                );
```

Description

Set the “Hide” or “Show” mode for each drawing area which is spdecified with "5.5.1.38 SetCroppingDrawRect".
When enable the "5.4.2.32 CroppingEnabled", this setting will be reflected in the video.

Argument

id	0 :Panorama image 1-5:Cropping frame	Cropping area id
mode	0 : Hide 1 : Show	

Return value

0	Success
Except 0	Error code

Error

Error is defined by the return value.
Get the error information by OnError event.

Note

Sequence

6.15 Cropping

Sample program code

Reference

5.4.1.41. GetCroppingDrawEnabled

Object	**PSAPI Control**
Method	**GetCroppingDrawEnabled**

```
long    GetCroppingDrawEnabled (
                long    id,
                );
```

Description

Get the “Hide” or “Show” mode for each drawing area which is spdecified with "5.5.1.40 SetCroppingDrawEnabled".
The gotten value is set to CropDrawMode property.

Argument

id	0 :Full screen display area 1-5:Cropping area	Cropping area id

Return value

0	Success
Except 0	Error code

Error

Error is defined by the return value.
Get the error information by OnError event.

Note

Sequence

Sample program code

Reference

5.4.1.42. SetCroppingMarker

Object	**PSAPI Control**
Method	**SetCroppingMarker**

```
long    SetCroppingMarker (
                    long    id,
                    long    mode,
                    long    ltX,
                    long    ltX,
                    long    rbX,
                    long    rbY
                    long    lineSize,
                    long    lineColor,
                    long    ellipseSize,
                    long    ellipseColor
                    );
```

Description

Set the color, size and style of the frame for showing the Cropping area.
When enable the "5.4.2.32 CroppingEnabled", this setting will be reflected in the video.

Argument

id	1-5:Cropping frame	Cropping area id
mode	0 : Not display the frame 1 : Display the frame without dot on the corner. 2 : Display the frame with dot on the corner.	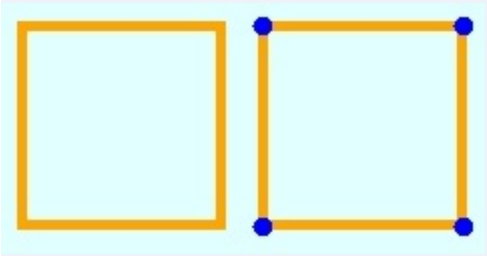 mode=1 mode=2
ltX	integer	Specify the top-left X position of Cropping area.
ltY	integer	Specify the top-left Y position of Cropping area.
rbX	integer	Specify the bottom-right X position of Cropping area.
rbY	integer	Specify the bottom-right Y position of Cropping area. * Negative value can be set on XY position, but the negative value area will not be displayed.
lineSize	1-10	Width of frame line
lineColor	0 – 16777215	Frame color The sum of R (Red), G (Green) and B (Blue) R, G and B are specified with the following value. R : 0 - 255 (0x000000 – 0x0000FF) G : 256 - 65280 (0x000100 – 0x00FF00) B : 65536 - 16711680 (0x010000 – 0xFF0000)
ellipseSize	1-10	Width of vertex Circle
ellipseColor	0 – 16777215	Circle color The sum of R (Red), G (Green) and B (Blue) R, G and B are specified with the following value. R : 0 - 255 (0x000000 – 0x0000FF) G : 256 - 65280 (0x000100 – 0x00FF00) B : 65536 - 16711680 (0x010000 – 0xFF0000)

Return value

0	Success
Except 0	Error code

Error

Error is defined by the return value.
Get the error information by OnError event.

Note

The coordinates of the Cropping frame should be specified the position which is based on the display area which is OCX Control size.

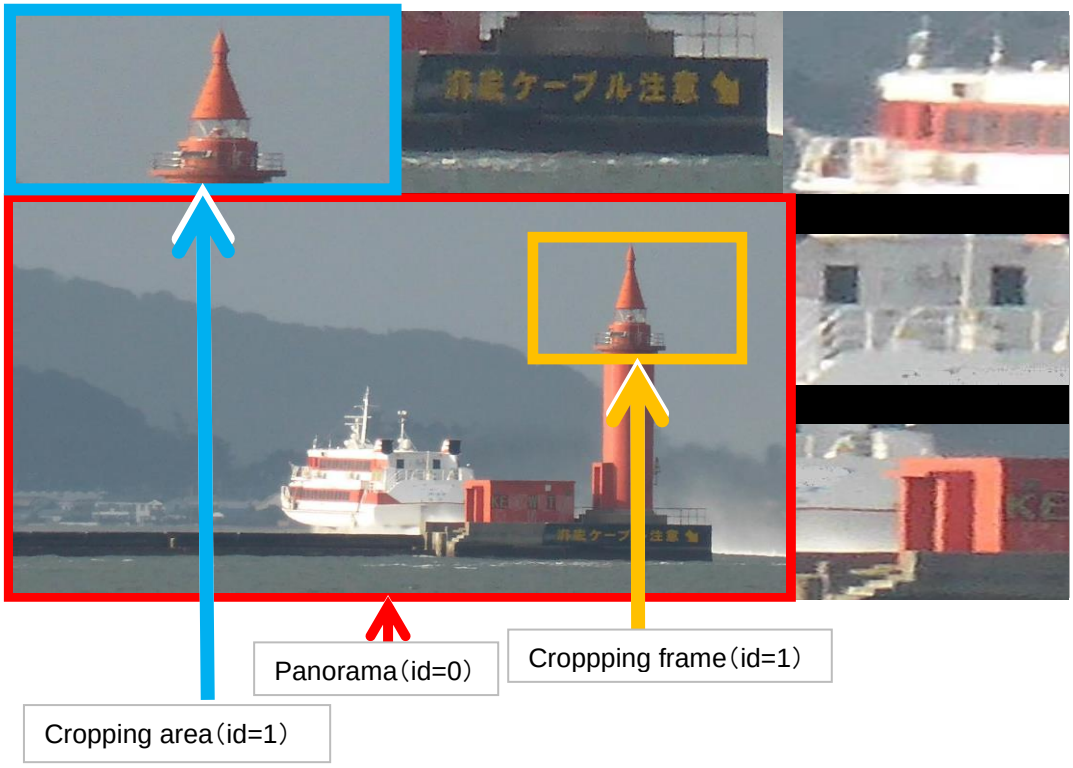

Sequence

Sample program code

Reference

5.4.1.43. GetCroppingMarker

Object	**PSAPI Control**
Method	**GetCroppingMarker**

```
long    GetCroppingMarker (
                long    id,
                );
```

Description

Get the the color ,size and style in the line of Cropping frame that has been set by “5.4.1.42 SetCroppingMarker”.
The gotten values are set to CropMarkerLtX, CropMarkerLtY, CropMarkerRbX, CropMarkerRbY, CropMarkerLSize, CropMarkerLColor, CropMarkerESize and CropMarkerEColor.

Argument

id	1-5:Cropping area	Cropping area id

Return value

0	Success
Except 0	Error code

Error

Error is defined by the return value.
Get the error information by OnError event.

Note

Sequence

Sample program code

Reference

5.4.1.44. HttpMP4Download

Object	**PSAPI Control**
Method	**HttpMP4Download**

```
long    HttpMP4Download (
                long    channel,
                long    command,
                char*   startTimeDate,
                char*   endTimeDate,
                long    audiomode,
                char*   fileName
                );
```

Description

Download MP4 file from NX Series via HTTP.

Argument

channel	1 to 4 : NX100,NU101 1 to 8 : NU201 1 to 16 : NU300/301 1 to 32 : NX200, NX300, NX310 1 to 64 : NX410 1 to 128 : NX400, NX510	Specify the video channel.
command	0 : Stop MP4 file download 1 : Start MP4 file download	Specify Stop MP4 file download / Start MP4 file download.
startTimeDate	yyyy/mm/dd hh:mm:ss	Download the recording data that started recording after the specified NX Series local time. The strings must be terminated with null character.
endTimeDate	yyyy/mm/dd hh:mm:ss	Download the recording data that start recording before the specified NX Series local time. Please specify the duration between startTimeDate and endTimeDate within 60 minutes. The strings must be terminated with null character.
audioMode	0 : video data only 1: video data and audio data	

Argument

fileName	Character strings (221 byte or less)	Specify a complete file path, and file name without extension for storing the downloaded video. The start date and time of the recorded data acquired from the NX Series is also added to the file name. An extension(mp4) is added automatically. The strings must be terminated with null character.

Return value

0	Success
Except 0	Error code

Error

Error is defined by the return value.
Get the error information by OnError event.

Note

NWDR other than NX Series does not have MP4 download function.
Depending on the NX Series specification, it may be divided into multiple MP4 files.
(Example :If the video format, resolution or recording type is different, the file will be split)
Depending on the NX Series specification, JPEG will be excluded from download.
While downloading, a ".tmp" file is created in the specified folder, but until downloading is completed do not manually delete ".tmp" file.

Sequence

Sample program code

Reference

5.4.1.45. HttpDownload

Object	**PSAPI Control**
Method	**HttpDownload**

```
long    HttpDownload (
                long    channel,
                long    command,
                char*   startTimeDate,
                long    isDstSt,
                char*   endTimeDate,
                long    isDstEt,
                long    dataType,
                char*   fileName
                );
```

Description

Download MP4 / n3r / n3a / n3n file from NX Series via HTTP.

Argument

channel	1 to 4 : NX100, NU101 1 to 8 : NU201 1 to 16 : NU300/301 1 to 32 : NX200, NX300, NX310 1 to 64 : NX410 1 to 128 : NX400, NX510	Specify the video channel.
command	0 : Stop MP4 file download 1 : Start MP4 file download	Specify Stop file download / Start file download.
startTimeDate	yyyy/mm/dd hh:mm:ss	Download the recording data that started recording after the specified NX Series local time. The strings must be terminated with null character.
isDstSt	0:Normal 1:Summer time	Summer time information of the time that is specified to startTimeDate.
endTimeDate	yyyy/mm/dd hh:mm:ss	Download the recording data that start recording before the specified NX Series local time. Please specify the duration between startTimeDate and endTimeDate within 60 minutes. The strings must be terminated with null character.
isDstEt	0:Normal 1:Summer time	Summer time information of the time that is specified to endTimeDate.

dataType	1 : MP4 (video only) 2: MP4 (video and audio) 3: n3r (video only) 4: n3r +n3a (video and audio) 5: n3n (Recording event information)	
fileName	Character strings (221 byte or less)	Specify a complete file path, and file name without extension for storing the downloaded video. The start date and time of the recorded data acquired from the NX Series is also added to the file name. An extension is added automatically. The strings must be terminated with null character.

Return value

0	Success
Except 0	Error code

Error

Error is defined by the return value.
Get the error information by OnError event.

Note

NWDR other than NX Series does not have HTTP download function.
Depending on the NX Series specification, it may be divided into multiple files.
(Example :If the video format, resolution or recording type is different, the file will be split)
In case of datatype=1 or 2 (MP4) , JPEG will be excluded from download.
While downloading, a ".tmp" file is created in the specified folder, but until downloading is completed do not manually delete ".tmp" file.

Sequence

Sample program code

Reference

5.4.1.46. GetMP4DownloadStatus

Object	**PSAPI Control**
Method	**GetMP4DownloadStatus**

long GetMP4DownloadStatus();

Description

Get current downloading status when using HttpMP4Download and HttpDownload method.

Argument

None

Return value

-1	Fail to get status.
0	No getting file via HTTP.
1	In getting file via HTTP.

Error

Get the error information by OnError event.

Note

Sequence

Sample program code

Reference

5.4.1.47. GetMP4DownloadTransRate

Object	**PSAPI Control**
Method	**GetMP4DownloadTransRate**

long GetMP4DownloadTransRate();

Description

Get current transmission speed [byte/s] of file downloading when using HttpMP4Download and HttpDownload method.

Argument

None

Return value

-1	Fail to get status.
0 or more	Transfer rate [byte/s]

Error

Get the error information by OnError event.

Note

Sequence

Sample program code

Reference

5.4.2. Property

5.4.2.1. MPEG4Port

Object	**PSAPI Control**
Property	**MPEG4Port**

long MPEG4Port

Description

Set a UDP port number to receive MPEG-4 video stream into PS-API.
Get a UDP port number to receive MPEG-4 video stream from PS-API.

Value

	The even number. Valid range : 1024 to 65534	UDP port number for MPEG-4 video communication. Default value is 12500.

Return value

None

Error

Note

Sequence

Sample program code

Reference

5.4.2.2. H264Port

Object	**PSAPI Control**
Property	**H264Port**
long	H264Port

Description

Set a UDP port number to receive H.264, H.265 video stream into PS-API.
Get a UDP port number to receive H.264, H.265 video stream from PS-API.

Value

The even number. Valid range : 1024 to 65534	UDP port number for H.264, H.265 video communication. Default value is 12500.

Return value

None

Error

Note

Sequence

Sample program code

Reference

5.4.2.3. RtpPortMode

Object	**PSAPI Control**
Property	**RtpPortMode**
long	RtpPortMode

Description

Set mode whether use a fixed port to receive MPEG-4/H.264/H.265 stream or not into PS-API.
Get mode whether use a fixed port to receive MPEG-4/H.264/H.265 stream or not from PS-API.

Value

0 : Disable 1 : Enable (Use fixed port)	Specifiy the fixed port mode. The default value is 0.

Return value

None

Error

Note

When RtpPortMode is set to "1", MPEG-4/H.264/H.265 stream is received at the port which is specified in MPEG4Port/H264Port.
When RtpPortMode is set to “1” and set the range of searchable port in RtpPortRange, it can limit a port range to use for the MPEG-4/H.264/H.265 stream reception.
The audio receiving port is MPEG-4/H.264/H.265 receiving port +1000.

Sequence

Sample program code

Reference

5.4.2.4. RtpPortRange

Object	**PSAPI Control**
Property	**RtpPortRange**
long	RtpPortRange

Description

Set available port range with a fixed MPEG-4/H.264/H.265 port mode into PS-API.
Get available port range with a fixed MPEG-4/H.264/H.265 port mode from PS-API.
*Search available port from “MPEG4Port/H.264Port” to “MPEG4Port/H.264Port + RtpPortRange”.

Value

0 - 65534	Available port range The default value is 0.

Return value

None

Error

Note

When RtpPortMode is set to “1” and set the range of searchable port in RtpPortRange, it can limit a port range to use for the MPEG-4/H.264/H.265 stream reception.
The audio receiving port is MPEG-4/H.264/H.265 receiving port +1000.

Sequence

Sample program code

Reference

5.4.2.5. MulticastAddr

Object	**PSAPI Control**
Property	**MulticastAddr**
BSTR	MulticastAddr

Description

Set a multicast address to receive MPEG-4/H.264/H.265 video stream into PS-API.
Get a multicast address to receive MPEG-4/H.264/H.265 video stream from PS-API.
MulticastAddr setting is valid when MulticastAutoConf is set to “0”.
*** Only IPv4 address is acceptable.**

Value

Character Strings (255 bytes or less)	IPv4 multicast IP address for a specified video stream. e.g. 239.192.0.20 Default value is “” (empty string).

Return value

None

Error

Note

When 0 is added at the top of segment like as 192.168.000.010, it is treated with octal number.
When port number is written after : (colon) like as 192.168.0.10:8080, it is ignored and the port number follows the setting.

Sequence

Sample program code

Reference

5.4.2.6. MPEG4Resolution

Object	**PSAPI Control**
Property	**MPEG4Resolution**
long	MPEG4Resolution

Description

Set a MPEG-4 video image resolution into PS-API.
It is necessary that MPEG-4Resolution is same value of the device setting.
Get a MPEG-4 video image resolution from PS-API.

Value

320 : 320x240 (QVGA) 640 : 640x480 (VGA) 720 : 720x480(D1:NTSC) 720x576(D1:PAL) 960 : 960x720	Specify a MPEG-4 image resolution for a retrieving video image. Default value is 640.

Return value

None

Error

Note

If the resolution of a received image is different from the specified resolution, this property is not updated. Then this property is not same as the value gotten by GetImageResolution method.

Sequence

6.1 PlayLive

Sample program code

[Visual Basic 2012] ..¥Sample Program¥PS-API¥Visual Basic 2012¥001_PlayLive
[Visual C# 2012] ..¥Sample Program¥PS-API¥Visual CSharp¥ 001_PlayLive
[HTML] ..¥Sample Program¥PS-API¥HTML¥001_PlayLive

Reference

5.4.2.7. H264Resolution

Object	**PSAPI Control**
Property	**H264Resolution**
long	H264Resolution

Description

Set a H.264/H.265 video image resolution into PS-API.
It is necessary that H264Resolution is same value of the device setting.
Get a H.264/H.265 video image resolution from PS-API.

Value

160 : 160x120 (4:3) 160x90 (16:9) 320 : 320x240 (QVGA) 320x180(16:9) 320x320(1:1) 180x320(9:16) 400 : 400x300 (4:3) 640 : 640x480 (VGA) 640x360(16:9) 640x640(1:1) 360×640 (9:16) 720 : 720x480(D1:NTSC) 720x576(D1:PAL) 800 : 800x600 960 : 960x720 1280 : 1280x960 (4:3) 1280x720 (16:9) 1280x1280 (1:1) 720×1280 (9:16) 1600 : 1600x1200 (4:3) 1920 : 1920x1080(16:9) 1080×1920 (9:16) 2048 : 2048x1536 (4:3) 2048x2048 (1:1) 2192 : 2192x2192 (1:1) 2560 : 2560x1920 (4:3) 2560x1440 (16:9) 2688 : 2688x1520(16:9) 2816 : 2816x2816 (1:1) 2992 : 2992x2992 (1:1) 3072 : 3072x1728 (16:9) 3072x2304 (4:3) 1728x3072 (9:16)	Specify a H.264/H.265 image resolution for a retrieving video image. Default value is 640.

Value

3328 : 3328x1872(16:9)
1872x3328(9:16)
3840 : 3840x2160(16:9)
2160x3840(9:16)
4000 : 4000x3000 (4:3)

Return value

None

Error

Note

If the resolution of a received image is different from the specified resolution, this property is not updated. Then this property is not same as the value gotten by GetImageResolution method.

Sequence

6.1 PlayLive

Sample program code

[Visual Basic 2012] ..¥Sample Program¥PS-API¥Visual Basic 2012¥001_PlayLive
[Visual C# 2012] ..¥Sample Program¥PS-API¥Visual CSharp¥ 001_PlayLive
[HTML] ..¥Sample Program¥PS-API¥HTML¥001_PlayLive

Reference

5.4.2.8. JPEGResolution

Object	**PSAPI Control**
Property	**JPEGResolution**

long JPEGResolution

Description

Set a JPEG video image resolution into PS-API.
It is necessary that JPEGResolution is same value of the device setting.
Get a JPEG video image resolution from PS-API.

Value

160 : 160x120 (4:3) 160x90 (16:9) 320 : 320x240 (QVGA) 320x180(16:9) 320x320(1:1) 180x320(9:16) 400 : 400x300 (4:3) 640 : 640x480 (VGA) 640x360(16:9) 640x640(1:1) 360×640 (9:16) 720 : 720x480(D1:NTSC) 720x576(D1:PAL) 800 : 800x600 960 : 960x720 1280 : 1280x960(4:3) 1280x720 (16:9) 1280x1280 (1:1) 720×1280 (9:16) 1600 : 1600x1200 (4:3) 1920 : 1920x1080(16:9) 1080×1920 (9:16) 2048 : 2048x1536(4:3) 2048x2048 (1:1) 2192 : 2192x2192 (1:1) 2560 : 2560x1920(4:3) 2560x1440 (16:9) 2688 : 2688x1520(16:9) 2816 : 2816x2816(1:1) 2992 : 2992x2992(1:1) 3072 : 3072x1728 (16:9) 3072x2304 (4:3) 1728x3072 (9:16)	Specify a JPEG image resolution for a retrieving video image. Default value is 640.

Value

3328 : 3328x1872(16:9)
1872x3328(9:16)
3840 : 3840x2160(16:9)
2160x3840(9:16)
4000 : 4000x3000 (4:3)

Return value

None

Error

Note

Sequence

6.1 PlayLive

Sample program code

[Visual Basic 2012] ..¥Sample Program¥PS-API¥Visual Basic 2012¥001_PlayLive
[Visual C# 2012] ..¥Sample Program¥PS-API¥Visual CSharp¥ 001_PlayLive
[HTML] ..¥Sample Program¥PS-API¥HTML¥001_PlayLive

Reference

5.4.2.9. ImageResolutionWidth

Object	**PSAPI Control**
Property	**ImageResolutionWidth**
long	ImageResolutionWidth

Description

When calling GetImageResolution method, the horizontal direction pixels of the live video or recorded video stream is set.

Value

0 and over	The horizontal direction pixels

Return value

None

Error

Note

Sequence

Sample program code

Reference

5.4.2.10. ImageResolutionHeight

Object	**PSAPI Control**
Property	**ImageResolutionHeight**
long	ImageResolutionHeight

Description

When calling GetImageResolution method, the vertical direction pixels of the live video or recorded video stream is set.

Value

0 and over	The vertical direction pixels

Return value

None

Error

Note

Sequence

Sample program code

Reference

5.4.2.11. StreamFormat

Object	**PSAPI Control**
Property	**StreamFormat**
long	StreamFormat

Description

Set image format of video stream into PS-API.
Get image format of video stream from PS-API.

Value

0 : JPEG 1 : MPEG-4 2 : HD300 3 : H.264 6 : H.265	Specify a video stream format for a displaying video image. Default value is 0.

Return value

None

Error

Note

In case of PlayLive/Play/PlayFile or DecodeImage with NWDR, NX Series PS-API gets stream format from the received video image and set StreamFormat property automatically.

When "6: H.265" is set as StreamFormat, the following properties are used for H.265 instead of H.264.

- H264Port
- H264Resolution

Sequence

6.1 PlayLive

Sample program code

[Visual Basic 2012] ..¥Sample Program¥PS-API¥Visual Basic 2012¥001_PlayLive
[Visual C# 2012] ..¥Sample Program¥PS-API¥Visual CSharp¥ 001_PlayLive
[HTML] ..¥Sample Program¥PS-API¥HTML¥001_PlayLive

Reference

5.4.2.12. FilePassword

Object	**PSAPI Control**
Property	**FilePassword**

BSTR FilePassword

Description

Set a password to playback the downloaded video file which has a password into PS-API.
Get a password to playback the downloaded video file which has a password from PS-API.

Value

Character Strings (15 bytes or less)	Password of the video data file. Default value is “” (empty string).

Return value

None

Error

Note

Sequence

6.3 PlayFile

Sample program code

[Visual Basic 2012] ..¥Sample Program¥PS-API¥Visual Basic 2012¥003_PlayFile
[Visual C# 2012] ..¥Sample Program¥PS-API¥Visual CSharp¥ 003_PlayFile
[HTML] ..¥Sample Program¥PS-API¥HTML¥003_PlayFile

Reference

5.4.2.13. MulticastAutoConf

Object	**PSAPI Control**
Property	**MulticastAutoConf**
long	MulticastAutoConf

Description

Set the multicast setting mode into PS-API whether use the multicast setting gotten from a target device or not.
Get the multicast setting mode from PS-API whether use the multicast setting gotten from a target device or not.

Value

	0 : Not use auto setting 1 : Use auto setting	Specify the multicast setting mode whether get multicast address and port number from a target device or not. Default value is 0.

Return value

None

Error

Note

MulticastAutoConf setting is valid when using MPEG-4/H.264/H.265 with camera and encoder. When the camera setting or encoder setting is unicast mode, MulticastAutoConf setting is ignored and PS-API works with unicast mode.

Sequence

Sample program code

Reference

5.4.2.14. StreamNumber

Object	**PSAPI Control**
Property	**StreamNumber**
long	StreamNumber

Description

Set the stream No. for multi streaming device.
Get the stream No. from PS-API.

Value

1: MPEG-4/H.264/H.265 stream 1 2: MPEG-4/H.264/H.265 stream 2 3: H.264/H.265 stream 3 4: H.264/H.265 stream 4	Stream number Default value is 1.

Return value

None

Error

Note

When setting InternetMode property to “1 (using HTTP)” and receiving live video image with a device which doesn’t support 2nd stream of MPEG-4/H.264, this parameter has to be set to “1”.
When setting InternetMode property to “0 (not using HTTP)” and receiving live video image with a device which doesn’t support 2nd stream of MPEG-4/H.264, this parameter is ignored.

When using 360-degree Network Camera, please refer to “4.7 About 360-degree Network Camera”.

Sequence

Sample program code

Reference

5.4.2.15. NXStreamNumber

Object	**PSAPI Control**
Property	**NXStreamNumber**
long	NXStreamNumber

Description

Set the stream No. of NX100, NX200, NX300 and NX400.
Get the stream No. of NX100, NX200, NX300 and NX400 from PS-API.

Value

1: H.264/H.265 stream 1 2: H.264/H.265 stream 2	Stream number Default value is 1.

Return value

None

Error

Note

This property is valid when the “Play”, “Search”, ”SearchEx” and “VMDSearchEx” method is executed.

Sequence

Sample program code

Reference

5.4.2.16. InternetMode

Object	**PSAPI Control**
Property	**InternetMode**
long	InternetMode

Description

Set the mode to receive MPEG-4/H.264/H.265 live via HTTP into PS-API.
Get the mode to receive MPEG-4/H.264/H.265 live via HTTP from PS-API.

Value

0 : Don’t use HTTP for receiving MPEG-4/H.264/H.265 live. 1 : Use HTTP for receiving MPEG-4/H.264/H.265 live.	Mode to receive MPEG-4/H.264/H.265 live. Default value is 0.

Return value

None

Error

Note

The device which supports MPEG-4/H.264/H.265 transmission via HTTP is as follows.

		Live				Play
		JPEG	MPEG-4	H.264	H.265	
HD300		Not support				Not support
NWDR	ND200	Not support	Not support	Not support		Not support
	ND300	Not support	Not support	Not support		Not support
	ND400	Not support	Support	Support		Not support
	NV200	Not support	Support	Support		Not support
	NV250	Not support		Support		Not support
	NV300	Not support		Support		Not support
NW Camera *1		Not support	Support	Support	Support	
Encoder *1		Not support	Support	Support		
HD600/700				Support		Not support
NX Series		Not support		Support	Support	Not support

*1 : NP1000, NP304, NT304 and NT314 don’t support MPEG-4 transmission via HTTP

When InternetMode property is set to ON, NWcamera or encoder's "Internet mode" has to set to ON.*1
InternetMode property needs to be set to same value of NWcamera or Encoder's "Internet mode" .*1
*1 For camera that does not have “Internet mode” setting(e.g. S1136 series.), Stream reception follows InternetMode property.

PS-API does not support DDNS name resolver.

InterenetMode cannot use with IPv6 environment.

Sequence

Sample program code

Reference

5.4.2.17. FastPlayMode

Object	**PSAPI Control**
Property	**FastPlayMode**

long FastPlayMode

Description

Set the viewing mode of fast forward/rewind rate in network playback into PS-API.
Get the viewing mode of fast forward/rewind rate in network playback from PS-API.

Value

0 : Normal mode 1 : High rate mode	Mode of fast forward/rewind rate in network playback Default value is 0.

Return value

None

Error

Note

ND200 and ND300 are not supported this property.
When using this property with ND400, NV200, NV250, NV300, NX Series and HD600/700, please confirm the device's firmware version and it is necessary to use the firmware which support this function.
If the device's firmware doesn't support this function. PS-API works as normal mode.

This property is valid with network playback.
In rewind, regardless of playback speed, only I pictures are displayed.

The description of the playback speed is as follows.
In the case of FastPlayMode = 0 (Normal mode)

[NWDR]

	Step1	Step2	Step3	Step4	Step5	Step6	Step7
ND400 NV200 NV250 NV300	x 1	x 4	x 8	x 16	x 32	x 48	x96

Note

[HD600/700]

	Step1	Step2	Step3	Step4	Step5	Step6	Step7
HD600/700	x 1	x 2	x 5	x 10	x 20	x 50	x100

[NX Series]

	Step1	Step2	Step3	Step4	Step5	Step6	Step7
NX Series	x 1	x 4	x 8	x 16	x 32	x 48	x96

In the case of FastPlayMode = 1 (High rate mode)

[NWDR]

	Step1	Step2	Step3	Step4	Step5	Step6	Step7
ND400 NV200 NV250 NV300	x 1	x 2	x 4	x 8	x 16	x 32	x48

[HD600/700]

	Step1	Step2	Step3	Step4	Step5	Step6	Step7
HD600/700	x 1	x 2	x 4	x 8	x 16	x 32	x48

[NX Series]

	Step1	Step2	Step3	Step4	Step5	Step6	Step7
NX Series	x 1	x 2	x 4	x 8	x 16	x 32	x48

When using high rate mode, the frames of all I-picture/P-picture/B-picture are displayed in the case of up to Step3. Therefore a delay may occur for drawing when doing fast forward/rewind a video image which is recorded with high resolution and high frame rate.
e.g.) When doing “Step3” fast forward the video image which is recorded with 4VGA resolution and 30 ips frame rate

Sequence

Sample program code

Reference

5.4.2.18. TransFrameRate

Object	**PSAPI Control**
Property	**TransFrameRate**
long	TransFrameRate

Description

Set frame rate for video stream into PS-API.
Get frame rate for video stream from PS-API.
TransFrameRate is valid when using JPEG PlayLive with camera and encoder, or using PlayLive/Play with HD300.

Value

0 : Use device setting 1 to 300 : Frame rate	Specify the optional frame rate for video stream. e.g.) 1 : 0.1 [ips] 100 : 10 [ips] 300 : 30 [ips] Default value is 0. In case of camera or encoder, the following frame rate are supported. 1, 2, 3, 5, 10, 20, 30, 50, 60, 100, 150, 300 * If specifying “3”, PS-API works as 0.33[ips].

Return value

None

Error

Note

In case of camera or encoder, if the specified frame rate is not supported on a target device, an error occurs from PS-API when calling PlayLive.
In case of HD300, the frame rate of received video stream may be less than the specified frame rate.
In case of Play with HD300, if specifying frame rate is less than the recording frame rate, playback speed becomes slow.

Sequence

Sample program code

Reference

5.4.2.19. PictureFitMode

Object	**PSAPI Control**
Property	**PictureFitMode**
long	PictureFitMode

Description

Set the view mode to keep its aspect ratio of the video stream, or to fit to the drawing area.
Get the view mode from PS-API.

Value

0: Keep its aspect ratio of the video stream 1: Fit to the drawing area	Specify the view mode to keep its aspect ratio of the video stream, or to fit to the drawing area. Default value is 1.

Return value

None

Error

Note

When PictureFitMode is set to “0” and the aspect ratio of video stream is different of the aspect ratio of drawing area, the black panels are shown on top and bottom or on the both side.

Figure **5-3** Black Panel on the Left and Right

Figure **5-4** Black Panel on the Top and Bottom

Sequence

Sample program code

Reference

5.4.2.20. PicturePosTopX

Object	**PSAPI Control**
Property	**PicturePosTopX**
long	PicturePosTopX

Description

When calling GetPicturePosition method, the top-left x position of the displayed picture except black panels is set.

Value

0 and over	The top-left x position of the displayed picture except black panels. (pixels)

Return value

None

Error

Note

The following points can be gotten as PicturePosTopX position.

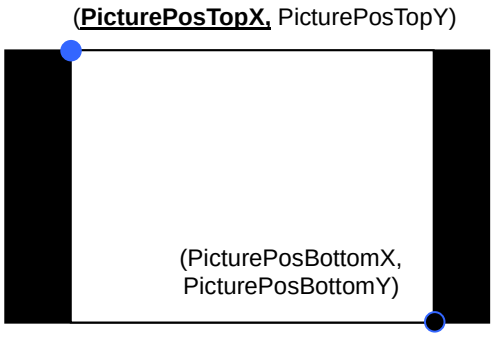

Figure **5-5** Black Panel on the Left and Right

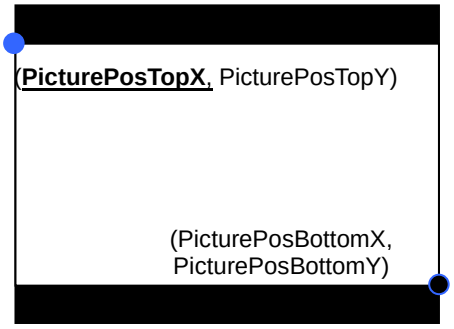

Figure **5-6** Black Panel ont the Top and Bottom

Sequence

Sample program code

Reference

5.4.2.21. PicturePosTopY

Object	**PSAPI Control**
Property	**PicturePosTopY**

long PicturePosTopY

Description

When calling GetPicturePosition method, the top-left y position of the displayed picture except black panels is set.

Value

0 and over	The top-left y position of the displayed picture except black panels. (pixels)

Return value

None

Error

Note

The following points can be gotten as PicturePosTopY position.

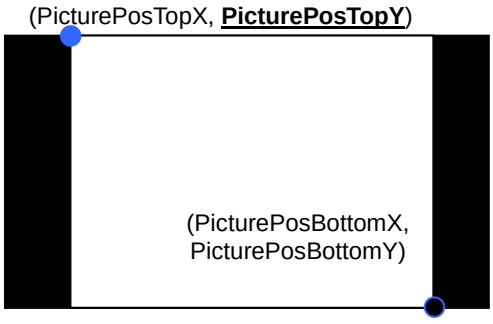

Figure **5-7** Black Panel on the Left and Right

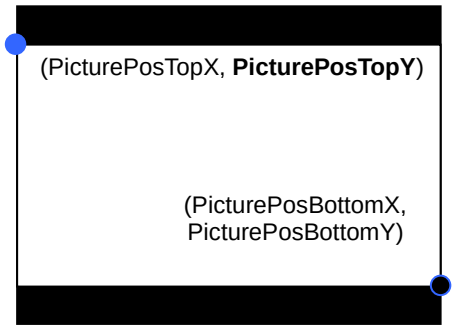

Figure **5-8** Black Panel ont the Top and Bottom

Sequence

Sample program code

Reference

5.4.2.22. PicturePosBottomX

Object	**PSAPI Control**
Property	**PicturePosBottomX**
long	PicturePosBottomX

Description

When calling GetPicturePosition method, the bottom-right x position of the displayed picture except black panels is set.

Value

0 and over	The bottom-right x position of the displayed picture except black panels. (pixels)

Return value

None

Error

Note

The following points can be gotten as PicturePosBottomX position.

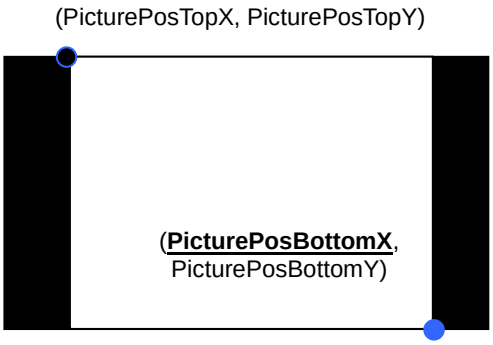

Figure **5-9** Black Panel on the Left and Right

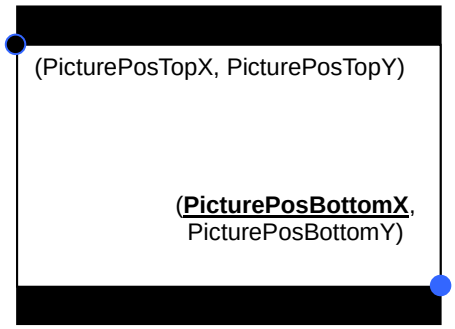

Figure **5-10** Black Panel ont the Top and Bottom

Sequence

Sample program code

Reference

5.4.2.23. PicturePosBottomY

Object	**PSAPI Control**
Property	**PicturePosBottomY**
long	PicturePosBottomY

Description

When calling GetPicturePosition method, the bottom-right y position of the displayed picture except black panels is set.

Value

0 and over	The bottom-right y position of the displayed picture except black panels. (pixels)

Return value

None

Error

Note

The following points can be gotten as PicturePosBottomY position.

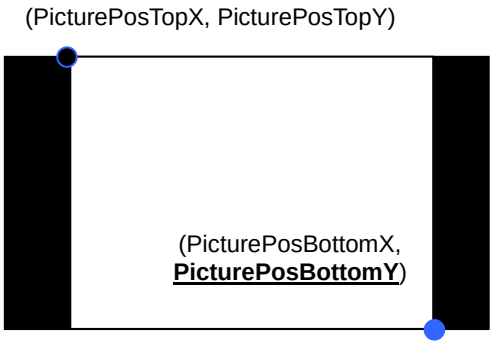

Figure **5-11** Black Panel on the Left and Right

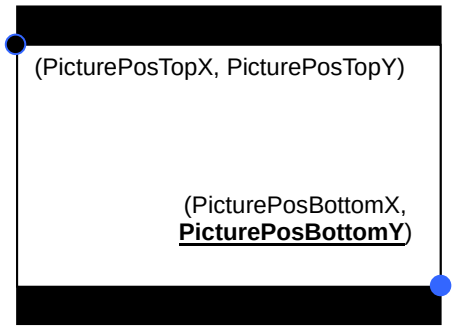

Figure **5-12** Black Panel ont the Top and Bottom

Sequence

Sample program code

Reference

5.4.2.24. DigitalZoom

Object	**PSAPI Control**
Property	**DigitalZoom**
long	DigitalZoom

Description

Do digital zoom of the displayed image by specifying magnification.
Get the magnification of digital zoom from PS-API.

Value

10 to 80	Specify the magnification of digital zoom. e.g. 10 : x 1 80 : x 8 Default value is 10.

Return value

None

Error

Note

When starting digital zoom, the center of image is displayed. For moving the displayed area, please use DigitalZoomMove method.
When displaying the video image with black panel and executing this method, the position and width of black panel is kept.

Sequence

Sample program code

Reference

5.4.2.25. DigitalZoomMode

Object	**PSAPI Control**
Property	**DigitalZoomMode**
long	DigitalZoomMode

Description

Set an enlarged / reduction method of digital zoom into PS-API.
Get an enlarged / reduction method of digital zoom from PS-API.

Value

0 : No complement 1 : Complement	Specify the mode of complement when drawing image. Default value is 0.

Return value

None

Error

Note

When using the mode except “0 : No complement”, the processing load to draw increases.

Sequence

Sample program code

Reference

5.4.2.26. DigitalZoomModePositionX

Object	**PSAPI Control**
Property	**DigitalZoomPositionX**
long	DigitalZoomPositionX

Description

When calling GetDigitalZoomPosition method, the horizontal posiion of the live video or recorded video stream is set.

Value

0 and over	x position

Return value

None

Error

Note

Sequence

Sample program code

Reference

5.4.2.27. DigitalZoomModePositionY

Object	**PSAPI Control**
Property	**DigitalZoomPositionY**
long	DigitalZoomPositionY

Description

When calling GetDigitalZoomPosition method, the vertical posiion of the live video or recorded video stream is set.

Value

0 and over	y position

Return value

None

Error

Note

Sequence

Sample program code

Reference

5.4.2.28. SkipRecordGap

Object	**PSAPI Control**
Property	**SkipRecordGap**
long	SkipRecordGap

Description

Set the mode whether skip the black images period that there is no recorded video between records into PS-API..
Get the mode whether skip the black images period that there is no recorded video between records from PS-API..
SkipRecordGap is valid with Play method. In case of PlayFile method, this property is ignored and the duration that there is no recorded video is skipped.

Value

0 : No skip 1 : Use skip	Specify the mode whether skip the black images period that there is no recorded video between records. Default value is 1.

Return value

None

Error

Note

It does not depend on the setting of this property, the black image is displayed when playback reaches the time that there is no recorded video between records. The resolution of black image is different from the resolution of recorded video image, then the notification of changing resolution occurs by OnError.
When the duration that there is no recorded video between records is less than 13 seconds, it doesn't skip.
In case of HD300, this property is ignored and the duration that there is no recorded video between records is skipped.

Sequence

Sample program code

Reference

5.4.2.29. MultiScreenChannel

Object	**PSAPI Control**
Property	**MultiScreenChannel**
BSTR	MultiScreenChannel

Description

Set the channel information when doing network playback on the multiple channel with same UID.
Get the channel information from PS-API.
When using the device which supports StreamID mode and setting On to SID mode, this method doesn't need to be executed.

Value

	Character strings (128 bytes or less)	Specify "1 : ON", "0 : OFF" for each channels. Default value is "000･･･000".（128 digits）. When specified 128 bytes character strings, the top (left side) of character is pair to channel 1, and the end (right side) of character is pair to channel 128. e.g. In case of playing channel 1, 3 and 6. "10100100……"

Return value

None

Error

Note

When using the device which supports StreamID mode and setting On to SID mode, this method doesn’t need to be executed.

This property is valid with HD300, NWDR, HD600/700 and NX Series.
Please set this property after executing Open/Connect method and before executing Play method.
This property is shared between all PS-API instances that share the same UID.
This property reflects the specified value to a target device when property is set. If error occurs, please set this property again.
Do not set this property to "1" for 16channels or more at the same time.
When set, it is 1 up to 16channels in ascending order.

Sequence

Sample program code

Reference

5.4.2.30. SIDMode

Object	**PSAPI Control**
Property	**SIDMode**
long	SIDMode

Description

Set the StreamID mode or normal (UID) mode into PS-API.
Get the StreamID mode or normal (UID) mode from PS-API.

Value

0 : Normal (use UID) mode 1 : StreamID mode	Specify the StreamID mode or normal (UID) mode. Default value is 0.

Return value

None

Error

Note

When DeviceType is Network camera, Encoder or HD300, Live/Network playback works with normal (UID) mode regardless of SIDMode setting.
When DeviceType is NWDR or HD600/700 or NX Series and the target device doesn't support StreamID, Live/Network playback does't work with StreamID mode.

Sequence

Sample program code

Reference

5.4.2.31. BackColor

Object	**PSAPI Control**
Property	**BackColor**

long BackColor

Description

Specify the background color of the drawing area.

Value

0 - 16777215	The sum of R (Red), G (Green) and B (Blue) R, G and B are specified with the following value. R : 0 = 255 0x000000 – 0x0000FF G : 256 = 65280 0x000100 – 0x00FF00 B : 65536 = 16711680 0x010000 – 0xFF0000 Default value is 0.

Return value

None

Error

Note

Sequence

Sample program code

Reference

5.4.2.32. DecResolutionMode

Object	**PSAPI Control**
Property	**DecResolutionMode**

long DecResolutionMode

Description

Set into PS-API whether to limit the decode size of H.264, H.265 or not.

Value

0 : Decode without the upper limit of resolution
3 : Decode by the upper limit of resolution Default value is 0.

Return value

None

Error

Note

ND200 and ND300 don’t support "3:Enable the setting of maximum decode resolution".

This function is only available for H.264/H.265. If set "3:Enable the setting of maximum decode resolution", video image is decoded by the resolution which is set to H264Resolution as maximum.
e.g.) When DecResoluitonMode is 3 and H264Resolution is 640(VGA), the resolution of the decoded video image is up to VGA, even if the original video image resolution which is transmitted by camera is 1280(4VGA).

When you enable this function, the snapshot image size is upto the size which is set to H264Resolution.

e.g.)

Decoded video image size		Original H.264/H.265 resolution (Camera transmission setting)		
		320	640	1280
Maximum decode size setting (H264Resolution with DecResolutionMode = 3)	320	320	**320**	**320**
	640	320	640	**640**
	1280	320	640	1280

Sequence

Sample program code

Reference

5.4.2.33. CroppingEnabled

Object	**PSAPI Control**
Property	**CroppingEnabled**

long CroppingEnabled

Description

Set the Cropping mode.

Value

0 : Don’t use Cropping	Default value is 0.
1 : Use Cropping	

Return value

None

Error

Note

Set “5.4.1.36 SetCroppingRect”, “5.4.1.38 SetCroppingDrawRect” and “5.4.1.42 SetCroppingMarker”, and turn on the Cropping function, then the setting value will be refrected.

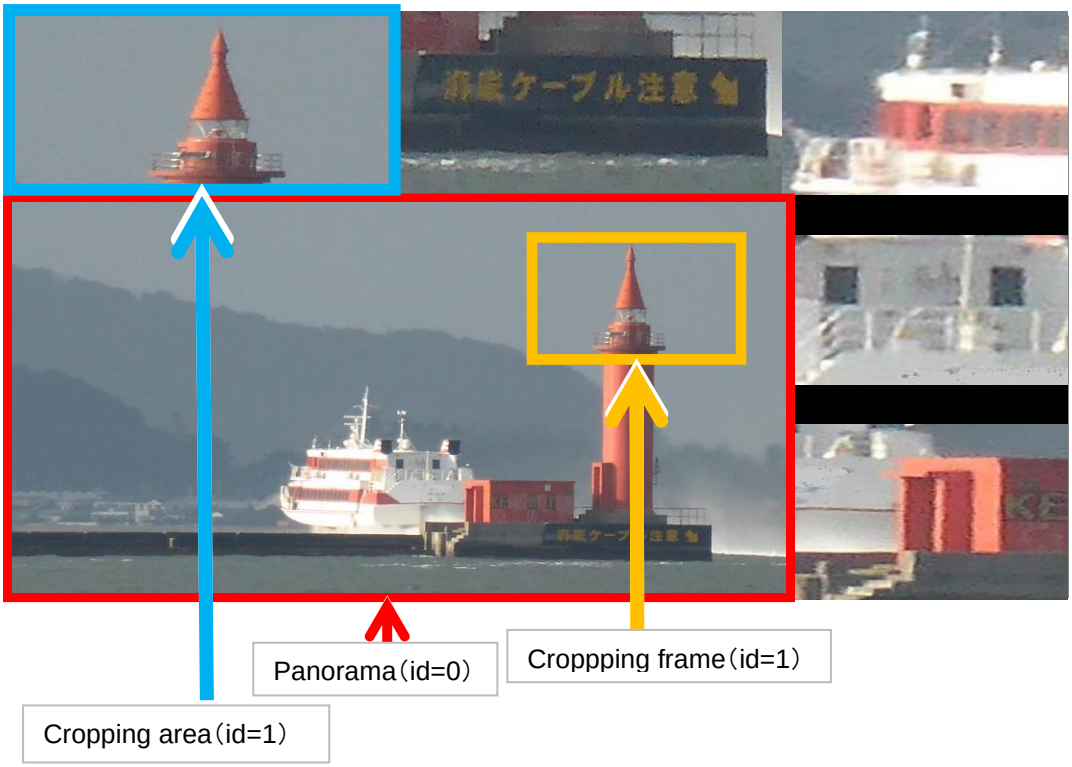

Sequence

6.15 Cropping

Sample program code

Reference

5.4.2.34. RcvAudioDec

Object	**PSAPI Control**
Property	**RcvAudioDec**

long RcvAudioDec

Description

Set receive audio format into PS-API.
Get receive audio format from PS-API.

Value

0 : auto
1 : G.726
3 : AAC Default value is 1.

Return value

None

Error

Note

Even if "auto" or correct audio format is specified, audio may not be heared.
Please see the table below for details.

	PlayLive	Play	PlayFile
G.726	Support	Support *1	Support *2
AAC	Support	Support *1	Support *2

*1 When is changed of the audio setting of NX Series between record creation and playback audio may not be heared.
*2 If both the G.726 and AAC audio format are recorded in the file to be played, audio may not be heared.

Transmission audio format is fixed to G726.
NU seriese recorders is not support G.726. Please set AAC.

Sequence

Sample program code

Reference

5.4.2.35. CropRectLtX

Object	**PSAPI Control**
Property	**CropRectLtX**

long CropRectLtX

Description

When calling GetCroppingRect method, the top-left x position of the Cropping position is set.

Value

0 and over	Get the top-left X position of Cropping area.

Return value

None

Error

Note

The coordinate value based on the PS-API OCX control size.

Sequence

Sample program code

Reference

5.4.2.36. CropRectLtY

Object	**PSAPI Control**
Property	**CropRectLtY**

long CropRectLtY

Description

When calling GetCroppingRect method, the top-left y position of the Cropping position is set.

Value

0 and over	Get the top-left Y position of Cropping area.

Return value

None

Error

Note

Sequence

Sample program code

Reference

5.4.2.37. CropRectRbX

Object	**PSAPI Control**
Property	**CropRectRbX**

long CropRectRbX

Description

When calling GetCroppingRect method, the bottom-right x position of the Cropping position is set.

Value

0 and over	Get the bottom-right X position of Cropping area.

Return value

None

Error

Note

The coordinate value based on the PS-API OCX control size.

Sequence

Sample program code

Reference

5.4.2.38. CropRectRbY

Object	**PSAPI Control**
Property	**CropRectRbY**
long	CropRectRbY

Description

When calling GetCroppingRect method, the bottom-right y position of the Cropping position is set.

Value

0 and over	Get the bottom-right Y position of Cropping area.

Return value

None

Error

Note

The coordinate value based on the PS-API OCX control size.

Sequence

Sample program code

Reference

5.4.2.39. CropDrawRectLtX

Object	**PSAPI Control**
Property	**CropDrawRectLtX**
long	CropDrawRectLtX

Description

When calling GetCroppingDrawRect method, the top-left x position of the Cropping position is set.

Value

0 and over	Get the top-left X position of Cropping area.

Return value

None

Error

Note

The coordinate value based on the PS-API OCX control size.

Sequence

Sample program code

Reference

5.4.2.40. CropDrawRectLtY

Object	**PSAPI Control**
Property	**CropDrawRectLtY**
long	CropDrawRectLtY

Description

When calling GetCroppingDrawRect method, the top-left y position of the Cropping position is set.

Value

0 and over	Get the top-left Y position of Cropping area.

Return value

None

Error

Note

The coordinate value based on the PS-API OCX control size.

Sequence

Sample program code

Reference

5.4.2.41. CropDrawRectRbX

Object	**PSAPI Control**
Property	**CropDrawRectRbX**
long	CropDrawRectRbX

Description

When calling GetCroppingDrawRect method, the bottom-right x position of the Cropping position is set.

Value

0 and over	Get the bottom-right X position of Cropping area.

Return value

None

Error

Note

The coordinate value based on the PS-API OCX control size.

Sequence

Sample program code

Reference

5.4.2.42. CropDrawRectRbY

Object	**PSAPI Control**
Property	**CropDrawRectRbY**
long	CropDrawRectRbY

Description

When calling GetCroppingDrawRect method, the bottom-right y position of the Cropping position is set.

Value

0 and over	Get the bottom-right Y position of Cropping area.

Return value

None

Error

Note

The coordinate value based on the PS-API OCX control size.

Sequence

Sample program code

Reference

5.4.2.43. CropDrawMode

Object	**PSAPI Control**
Property	**CropDrawMode**

long CropDrawMode

Description

When calling GetCroppingDrawRect method, Hide/Show each id of Cropping is set.

Value

0 : hide
1 : show

Return value

None

Error

Note

Sequence

Sample program code

Reference

5.4.2.44. CropMarkerMode

Object	**PSAPI Control**
Property	**CropMakerMode**
long	CropMarkerMode

Description

When calling GetCroppingMarker method, CropMarkerMode is set.

Value

mode	0 : Not display the frame 1 : Display the frame without dot on the corner. 2 : Display the frame with dot on the corner.

Return value

None

Error

Note

Sequence

Sample program code

Reference

5.4.2.45. CropMarkerLtX

Object	**PSAPI Control**
Property	**CropMakerLtx**
long	CropMarkerLtX

Description

When calling GetCroppingMarker method, the top-left x position of the Marker is set.

Value

ltX	0 and over	Get the top-left X position of Cropping area.

Return value

None

Error

Note

The coordinate value based on the PS-API OCX control size.

Sequence

Sample program code

Reference

5.4.2.46. CropMarkerLtY

Object	**PSAPI Control**
Property	**CropMakerLtY**
long	CropMarkerLtY

Description

When calling GetCroppingMarker method, the top-left y position of the Marker is set.

Value

ltY	0 and over	Get the top-left Y position of Cropping area.

Return value

None

Error

Note

The coordinate value based on the PS-API OCX control size.

Sequence

Sample program code

Reference

5.4.2.47. CropMarkerRbX

Object	**PSAPI Control**
Property	**CropMakerRbX**
long	CropMarkerRbX

Description

When calling GetCroppingMarker method, the bottom-right x position of the Marker is set.

Value

rbX	0 and over	Get the bottom-right X position of Cropping area.

Return value

None

Error

Note

The coordinate value based on the PS-API OCX control size.

Sequence

Sample program code

Reference

5.4.2.48. CropMarkerRbY

Object	**PSAPI Control**
Property	**CropMakerRbY**
long	CropMarkerRbY

Description

When calling GetCroppingMarker method, the bottom-right y position of the Marker is set.

Value

rbY	0 and over	Get the bottom-right Y position of Cropping area.

Return value

None

Error

Note

The coordinate value based on the PS-API OCX control size.

Sequence

Sample program code

Reference

5.4.2.49. CropMarkerLSise

Object	**PSAPI Control**
Property	**CropMakerLSize**
long	CropMarkerLSize

Description

When calling GetCroppingMarker method, line size of the Marker is set.

Value

lineSize	1-10	Width of frame line

Return value

None

Error

Note

Sequence

Sample program code

Reference

5.4.2.50. CropMarkerLColor

Object	**PSAPI Control**
Property	**CropMakerLColor**

long CropMarkerLColor

Description

When calling GetCroppingMarker method, line color of the Marker is set.

Value

lineColor	0 – 16777215	Frame color The sum of R (Red), G (Green) and B (Blue) R, G and B are specified with the following value. R : 0 - 255 (0x000000 – 0x0000FF) G : 256 - 65280 (0x000100 – 0x00FF00) B : 65536 - 16711680 (0x010000 – 0xFF0000)

Return value

None

Error

Note

Sequence

Sample program code

Reference

5.4.2.51. CropMarkerESize

Object	**PSAPI Control**
Property	**CropMakerESize**
long	CropMarkerESize

Description

When calling GetCroppingMarker method, circle size of the Marker is set.

Value

ellipseSize	1-10	Width of Circle

Return value

None

Error

Note

Sequence

Sample program code

Reference

5.4.2.52. CropMarkerEColor

Object	**PSAPI Control**
Property	**CropMakerEColor**

long CropMarkerEColor

Description

When calling GetCroppingMarker method, circle color of the Marker is set.

Value

ellipseColor	0 – 16777215	Circle color The sum of R (Red), G (Green) and B (Blue) R, G and B are specified with the following value. R : 0 - 255 (0x000000 – 0x0000FF) G : 256 - 65280 (0x000100 – 0x00FF00) B : 65536 - 16711680 (0x010000 – 0xFF0000)

Return value

None

Error

Note

Sequence

Sample program code

Reference

5.4.2.53. TransIntervalMode

Object	**PSAPI Control**
Property	**TransIntervalMode**
long	TransIntervalMode

Description

Set the mode to correct the transmission interval of decoded pictures.

Value

	0：OFF	Default value is 0.
	1：ON	

Return value

None

Error

Note

・JPEG/HD300 are not supported
・Not supported when the frame rate is less than 1fps
Even if the rate temporarily drops less 1fps due to a network error or other error,
the function stops.
Execute the PlayLive/Play/PlayFile method to resume the function.

When TransIntervalMode = 1, it has the effect of suppressing the video unsmooth movement.
The effect can be adjusted by the setting value of DecBufferNum property.
Set DecBufferNum property according to the operating environment.

supplementary note:
(1) This function may not be effective.
e.g.) video unsmooth movement due to network delay
(2) It takes a little more time from operation until the first image appears.
But does not mean that the video delay spread.
(3) It would be increased memory usage, because it suppress the video unsmooth movement
by accumulateing image.

Sequence

Sample program code

Reference

5.4.2.54. DecBufferNum

Object	**PSAPI Control**
Property	**DecBufferNum**

long DecBufferNum

Description

Set decode buffer number to PS-API

Value

4 - 20 : buffer number Default value is 4.

Return value

None

Error

Note

Sequence

Sample program code

Reference

5.4.2.55. OnPlayStatusEnable

Object	**PSAPI Control**
Property	**OnPlayStatusEnable**

long OnPlayStatusEnable

Description

Set/Get the setting whether use the OnPlayStatus event or not.

Value

0 : Not use event Except 0 : Use event	Default value is 0.

Return value

None

Error

Note

Sequence

Sample program code

Reference

5.4.2.56. OnRecordStatusEnable

Object	**PSAPI Control**
Property	**OnRecordStatusEnable**

long OnRecordStatusEnable

Description

Set/Get the setting whether use the OnRecordStatus event or not.

Value

0 : Not use event Except 0 : Use event	Default value is 0.

Return value

None

Error

Note

Sequence

Sample program code

Reference

5.4.2.57. OnImageRefreshEnable

Object	**PSAPI Control**
Property	**OnImageRefreshEnable**

long OnImageRefreshEnable

Description

Set/Get the setting whether use the OnImageRefresh event or not.

Value

0 : Not use event Except 0 : Use event	Default value is 0.

Return value

None

Error

Note

Sequence

Sample program code

Reference

5.4.2.58. OnPlayStatusCBEnable

Object	**PSAPI Control**
Property	**OnPlayStatusCBEnable**

long OnPlayStatusCBEnable

Description

Set/Get the setting whether use the OnPlayStatusCB event or not.

Value

0 : Not use event Except 0 : Use event	Default value is 0.

Return value

None

Error

Note

Sequence

Sample program code

Reference

5.4.2.59. OnMP4DownloadStatusEnable

Object	**PSAPI Control**
Property	**OnMP4DownloadStatusEnable**

long OnMP4DownloadStatusEnable

Description

Set/Get the setting whether use the OnMP4DownloadStatusEnable event or not.

Value

0 : Not use event Default value is 0.
Except 0 : Use event

Return value

None

Error

Note

Sequence

Sample program code

Reference

5.4.3. Event

5.4.3.1. OnPlayStatus

Object	**PSAPI Control**
Event	**OnPlayStatus**

```
void    OnPlayStatus(
                long    channel,
                long    status
                );
```

Description

The OnPlayStatus notification function is to pass play status from PS-API to the application.

Argument

channel	0 : In case of file playback 1 : Network Camera, GXE100 1 to 4 : Encoder NX100, NU101 1 to 8 : NU201 1 to 16 : ND200, HD300, HD600/700, NU300/301 1 to 24 : NV200, NV250 1 to 32 : ND300, NV300 NX200, NX300, NX310 1 to 64 : ND400, NX410 1 to 128 : NX400, NX510	Specify the video channel.
status	-1 : Not displaying Playback and Live image or Run with non-blocking mode 0 : Live 1 : Pause 2 : Play 3 : Preparing for Play	Specify the current video play status.

Return value

None

Error

Note

Please don’t use PS-API functions in the notified event.
When the "HDD Standby Control" setting is "ON" in the NX Series, it may take time to play back.
In that case, "status = 3 (Preparing for Play)" may be notified.

Sequence

Sample program code

Reference

5.4.3.2. OnRecordStatus

Object	**PSAPI Control**
Event	**OnRecordStatus**

```
void    OnRecordStatus(
                long    recType,
                BSTR    timeDate,
                long    isDst,
                BSTR    nextRecTime,
                long    isDstNext
                 );
```

Description

The OnRecordStatus notification function is to pass the beginning point of the record and the end point of the record status from PS-API to the application.

Argument

recType	1 : The beginning point 2 : The end point	The beginning point and the end point of the record.
timeDate	yyyy/mm/dd hh:mm:ss	Time-and-date of the played record.
isDst	0 : Normal 1 : Summer time	Summer time information of the time that is specified to timeDate.
nextRecTime	yyyy/mm/dd hh:mm:ss	When recType is set to “2”, the beginning time-and-date of the next record is set. If there is no next record or if recType is set to”1”, “” (empty string) is set.
isDstNext	0 : Normal 1 : Summer time	Summer time information of the time that is specified to nextRecTime.

Return value

None

Error

Note

Please don’t use PS-API functions in the notified event.
If there is no record at the specified time-and-date by using Play method, this event notify with “recType = 2”.
In case of HD300, even if OnRecordStatusEnable is set to “ON”, OnRecordStatus event is not notified.

Sequence

Sample program code

Reference

5.4.3.3. OnImageRefresh

Object	**PSAPI Control**
Event	**OnImageRefresh**

void OnImageRefresh( );

Description

The OnImageRefresh notification function is to pass image data with specified type from PS-API to the application.

Argument

None

Return value

None

Error

Note

Please don’t use PS-API functions in the notified event.

Sequence

Sample program code

Reference

5.4.3.4. OnPlayStatusCB

Object	**PSAPI Control**
Event	**OnPlayStatusCB**

```
void    OnPlayStatusCB(
                long    status
                );
```

Description

The play status callback function is to pass video play status from PS-API to the application.

Argument

status	-1 : Not displaying Playback and Live image or Run with non-blocking mode 0 : Live 1 : Pause 2 : Play 3 : Preparing for Play	Specify the current video play status.

Return value

None

Error

Note

Please don’t use PS-API functions in the notified event.
When the "HDD Standby Control" setting is "ON" in the NX Series, it may take time to play back.
In that case, "status = 3 (Preparing for Play)" may be notified.

Sequence

Sample program code

Reference

5.4.3.5. OnMP4DownloadStatus

Object	**PSAPI Control**
Event	**OnMP4DownloadStatus**

```
void    OnMP4DownloadStatus (
                    long    status,
                    char*   fileName
                    );
```

Description

Notify the status of HttpMP4Download and HttpDownload method the specified application.

Argument

status	0 : Completed file download. 1 : File downloading.(split file) 2 : Forced stop of file download	Result of file download
fileName	Pointer to character strings	Output file name

Return value

None

Error

Note

Please don’t use PS-API functions in the notified event.

Sequence

Sample program code

Reference

5.5. Audio Group

5.5.1. Method

5.5.1.1. AudioSend

Object	**PSAPI Control**
Method	**AudioSend**

```
long    AudioSend(
                long    command
                );
```

Description

Start or Stop the audio transmission.

Argument

command	0 : Stop audio transmission 1 : Start audio transmission

Return value

0	Success
Except 0	Error code

Error

Error is defined by the return value.
Get the error information by OnError event.

Note

The audio transmission can be used when doing PlayLive with Network camera and encoder.
When send audio to the devices with full duplex mode or half duplex mode, please set AudioRcvEnable to “1”.
The audio transmission is disconnected by duration configured at the device(default : 5 minutes). If you need to send audio continuously, please find out the disconnection by OnError or AudioSendStatus, and then execute AudioSend method again.
This method uses the sound recording device on PC. Therefore to use this method may affect other applications.
Transmission audio format is fixed to G726.
If this method is executed for a camera that is transmitting audio, an error will occur.
However, it is possible to start multiple PS-API instances and send audio to different cameras.
If you cannot work audio transmission , please check the following Windows settings.

・[Windows+S] Services - Windows Audio Status : Running

・[Windows+S] Privacy settings - Microphone - Allow apps to access your microphone : On

Sequence

Sample program code

Reference

5.5.1.2. GetAudioSendStatus

Object	**PSAPI Control**
Method	**GetAudioSendStatus**

long GetAudioSendStatus( );

Description

Get the audio transmission status.

Argument

None

Return value

0	Stop sending audio
1	In sending audio
2	Busy (The other instance uses the audio transmission)
Negative value	Error code

Error

Error is defined by the return value.
Get the error information by OnError event.

Note

Sequence

Sample program code

Reference

5.5.2. Property

5.5.2.1. AudioRcvEnable

Object	**PSAPI Control**
Property	**AudioRcvEnable**

long AudioRcvEnable

Description

Set a mode whether receiving audio stream with PlayLive or Play into PS-API.
Get a audio reception mode from PS-API.

Value

0 : Not receive audio stream 1 : Receive audio stream	Specify a audio reception mode. Default value is 0.

Return value

None

Error

Note

After PlayLive and Play started, the setting cannot be changed.
Please set the RcvAudioDec property according to the " Audio input encoding format" setting of the target device.
Please adjust the volume by AudioRcvVolume property.
Some instances receives audio stream at the same time, the sound is composed.

The audio reception support depends on a target device.
Please refer to the following table.

	HD300	NWDR	Camera	Encoder	HD600/700	NX Series
PlayLive	-	*1	Yes	Yes	Yes	Yes
Play	-	*2			Yes	Yes
PlayFile	-	Yes			Yes	Yes

*1 : ND200 and ND300 don’t support it.
*2 : ND300 doesn’t support it.

If you cannot work audio reception , please check the following Windows settings.
・[Windows+S] Services - Windows Audio Status : Running

Sequence

Sample program code

Reference

5.5.2.2. AudioRcvVolume

Object	**PSAPI Control**
Property	**AudioRcvVolume**
long	AudioRcvVolume

Description

Set a volume of the audio reception into PS-API.
Get a volume of the audio reception from PS-API.

Value

0 (minimum) to 100 (maximum)	Volume of the audio reception. Default value is 10.

Return value

None

Error

Note

The volume can be set each instance.
Some instances receives audio stream at the same time, the sound is composed.
When the audio reception needs to set mute, please use AudioRcvMute property.
Even if AudioRcvVolume is set to “0”, it is not mute.

Sequence

Sample program code

Reference

5.5.2.3. AudioRcvMute

Object	**PSAPI Control**
Property	**AudioRcvMute**
long	AudioRcvMute

Description

Set a mute mode of the audio reception into PS-API.
Get a mute mode of the audio reception from PS-API.

Value

0 : Not mute mode 1 : Mute mode	Mute mode of the audio reception Default value is 0.

Return value

None

Error

Note

The volume can be set each instance.
Some instances receives audio stream at the same time, the sound is composed.

Sequence

Sample program code

Reference

5.5.2.4. AudioSendVolume

Object	**PSAPI Control**
Property	**AudioSendVolume**
long	AudioSendVolume

Description

Set a volume of the audio transmission into PS-API.
Get a volume of the audio transmission from PS-API.

Value

0 (minimum) to 100 (maximum)	Volume of the audio transmission. Default value is 10.

Return value

None

Error

Note

This property changes the sound recording device on PC.
When the audio transmission needs to set mute, please use AudioSendMute property.
Even if AudioSendVolume is set to “0”, it is not mute.

Sequence

Sample program code

Reference

5.5.2.5. AudioSendMute

Object	**PSAPI Control**
Property	**AudioSendMute**

long AudioSendMute

Description

Set a mute mode setting of the audio transmission into PS-API.
Get a mute mode setting of the audio transmission from PS-API.

Value

0 : Not mute mode 1 : Mute mode	Mute mode of the audio transmission. Default value is 0.

Return value

None

Error

Note

This property does NOT change the sound recording device on PC.

Sequence

Sample program code

Reference

5.6. Operation Group

5.6.1. Method

5.6.1.1. CameraControl

Object	**PSAPI Control**
Method	**CameraControl**

```
long    CameraControl(
                long    channel,
                long    pan,
                long    tilt,
                long    zoom,
                long    focus,
                long    iris
                );
```

Description

Send Pan, Tilt, Zoom, Focus, Iris command to the specified camera.
In case of sending CameraControl method repeatedly, the interval between commands needs to be set to 80 or more [milliseconds].
*** About more detailed information, refer to Note.**

Argument

channel	1 : Network Camera, GXE100 1 to 3 : S8573, X86530-Z2 1 to 4 : Encoder X8570, X8571, S8574, X86531-Z2 NX100, NU101 1 to 8 : NU201 1 to 16 : ND200, HD300, HD600/700, NU300/301 1 to 24 : NV200, NV250 1 to 32 : ND300, NV300, NX200, NX300, NX310 1 to 64 : ND400, NX410 1 to 128 : NX400, NX510	Specify the video channel. X8570, X8571, S8573 S8574, X86530-Z2, X86531-Z2 can use Iris function for specified channel. However, when Image capture mode on S8573 S8574, X86530-Z2, X86531-Z2 is “Quad” or “Panorama”, Iris function works as channel 1 regardless of the specified channel value.
pan	0 : Stop -256(Left) to 256(Right) : Pan speed	*** The direction of Pan/Tilt is for ceiling setting mode. (The camera is to be installed with the dome side down.)**
tilt	0 : Stop -256(Upper) to 256(Lower) : Tilt speed	
zoom	0 : Stop -4 (Wide) to 4 (Tele) : Zoom speed	

Argument

focus	0 : Stop -4 (Near) to 4 (Far) : Focus speed
iris	0 : Iris Stop 1 : Iris Open 2 : Iris Close 3 : Iris return to the default position

Return value

0	Success
Except 0	Error code

Error

Error is defined by the return value.
Get the error information by OnError event.

Note

Depending on the camera model, a PoE + (compliant with IEEE802.3at)/ PoE ++ (compliant with IEEE802.3bt) compatible hub or power supply device may be required.Please refer to the device manual.
In case of the NWDR, HD600/700 and NX Series, the network camera or the encoder, Focus cannot be used with Pan/Tilt/Zoom at the same time. If Pan/Tilt/Zoom and Focus is specified, Pan/Tilt/Zoom has priority, Focus is invalid.
When controlling the analog camera via a HD300, 2 or more operations (Pan and Tilt/ Zoom/ Focus/ Iris) cannot be used at the same time.
In case of the HD300, if the interval between the commands is short, the analog camera doesn't work.
When controlling the analog camera via a HD300, HD600/700 or Encoder, error will not occur though the target analog camera doesn’t support the operations (Pan and Tilt/ Zoom/ Focus/ Iris).

When using the camera with electronic zoom and setting the electronic zoom function to “ON”, Zoom control doesn’t work after reaching the edge of tele or the edge of wide. In this case, please send zoom stop comman.

When Network Camera is set to “desktop setting mode” (the camera is to be installed with the dome side up), the direction of Pan/Tilt is same as “ceiling setting mode”.

When using 360-degree Network Camera, please refer to “4.7 About 360-degree Network Camera”.

Sequence

6.4 CameraControl

Sample program code

[Visual Basic 2012] ..¥Sample Program¥PS-API¥Visual Basic 2012¥004_CameraControl
[Visual C# 2012] ..¥Sample Program¥PS-API¥Visual CSharp¥ 004_CameraControl
[HTML] ..¥Sample Program¥PS-API¥HTML¥004_CameraControl

Reference

5.6.1.2. SetCameraPosition

Object	**PSAPI Control**
Method	**SetCameraPosition**

```
long    SetCameraPosition(
                    long    channel
                    long    pan,
                    long    tilt,
                    long    zoom,
                    long    focus
                    );
```

Description

Set Pan, Tilt, Zoom and Focus values in absolute angle.
SetCameraPosition is valid to a Network Camera.

Argument

channel	1 (Fixed)	Specify the video channel.
pan	-475 to 3599	Specified Pan value -475 : -47.5 [degree] (Left) 3599 : 359.9 [degree] (Right)
tilt	-900 to 900	Specified Tilt value -900 : -90 [degree] (Upper) 900 : 90 [degree] (Lower) *** The direction of Pan/Tilt is for ceiling setting mode. (The camera is to be installed with the dome side down.)**
zoom	10 to 9999	Specified Zoom value 10 : x1 9999 : x999.9
focus	1 to 9999	Specified Focus value 1 : 0.1 [m] 9999 : 999.9 [m]

Return value

0	Success
Except 0	Error code

Error

Error is defined by the return value.
Get the error information by OnError event.

Note

Depending on the camera model, the valid range (angle, zoom) is different.
Depending on the camera model, a PoE + (compliant with IEEE802.3at) / PoE ++ (compliant with IEEE802.3bt) compatible hub or power supply device may be required.Please refer to the device manual.
Tilt cannot be specified over 900. If the tilt exceeds 90°, flip the Pan position 180° and adjust the tilt position.

The got value by using GetCameraPosition is different from the set value by using SetCameraPosition.

When Network Camera is set to “desktop setting mode” (the camera is to be installed with the dome side up), the plus value of Tilt works as Lower and the minus value of Tilt works as Upper. The direction of Pan is same as “ceiling setting mode”.

Sequence

6.5 CameraOperation

Sample program code

[Visual Basic 2012] ..¥Sample Program¥PS-API¥Visual Basic 2012¥005_CameraOperation
[Visual C# 2012] ..¥Sample Program¥PS-API¥Visual CSharp¥ 005_CameraOperation
[HTML] ..¥Sample Program¥PS-API¥HTML¥005_CameraOperation

Reference

5.6.1.3. GetCameraPosition

Object	**PSAPI Control**
Method	**GetCameraPosition**

```
long    GetCameraPosition(
                    long    channel
                    );
```

Description

Get Pan, Tilt, Zoom and Focus values in absolute angle.
GetCameraPosition is valid to a Network Camera.
The got absolute angle values for Pan/ Tilt/ Zoom/ Focus are set to CameraPosPan/ CameraPosTilt/ CameraPosZoom/ CameraPosFocus properties.

Argument

channel	1 (Fixed)	Specify the video channel.

Return value

0	Success
Except 0	Error code

Error

Error is defined by the return value.
Get the error information by OnError event.

Note

Depending on the camera models, the valid range (angle, zoom) is different.
The got value by using GetCameraPosition is different from the set value by using SetCameraPosition.

When Network Camera is set to “desktop setting mode” (the camera is to be installed with the dome side up), Lower is the plus value of Tilt and Upper is the minus value of Tilt. The direction of Pan is same as “ceiling setting mode”.

Sequence

6.5 CameraOperation

Sample program code

[Visual Basic 2012] ..¥Sample Program¥PS-API¥Visual Basic 2012¥005_CameraOperation
[Visual C# 2012] ..¥Sample Program¥PS-API¥Visual CSharp¥ 005_CameraOperation
[HTML] ..¥Sample Program¥PS-API¥HTML¥005_CameraOperation

Reference

5.6.1.4. CameraOperation

Object	**PSAPI Control**
Method	**CameraOperation**

```
long    CameraOperation(
                long    channel
                long    command,
                long    data,
                long    mode
                );
```

Description

Operate camera such as auto track, auto pan, auto focus.

Argument

channel	1 : Network Camera, GXE100 1 to 3 : S8573, X86530-Z2 1 to 4 : Encoder, X8570, X8571, S8574, X86531-Z2 NX100, NU101 1 to 8 : NU201 1 to 16 : ND200, HD300, HD600/700, NU300/301 1 to 24 : NV200, NV250 1 to 32 : ND300, NV300, NX200, NX300, NX310 1 to 64 : ND400, NX410 1 to 128 : NX400, NX510	Specify the video channel. X8570, X8571, S8573, S8574, X86530-Z2, X86531-Z2 can use “Super Dynamic” function for specified channel. However, when Image capture mode on S8573, S8574, X86530-Z2, X86531-Z2 is “Quad” or “Panorama”, “Super Dynamic” function works for all channels regardless of the specified channel value.
command	0 : No operation 1 : Auto Track 2 : Auto Pan 3 : Auto Focus 4 : Set Preset 5 : Call Preset 6 : Delete Preset 7 : Auto Back Focus 8 : Super Dynamic 9 : Preset sequence 10 : Auto sort 11 : Patrol	Encoder, HD300, NWDR and HD600/700 don’t support “6 : Delete Preset”, “7 : Auto Back Focus” and “8 : Super Dynamic”. NW camera, GXE500,GXE100, NWDR and NX Series don’t support “10 : Auto sort”.

Argument

data	[Set / Call / Delete Preset position] 0 : Home position 1 to 256 : NWDR NX Series Encoder, HD300, Network Camera [Super Dynamic] 0 : OFF 1 : ON(Normal) 2 : ON(High) 3 : ON(Super Dynamic) [Preset sequence] 1 : HD300, NWDR, NX Series Encoder HD600/700 1 to 3 :Network Camera [Patrol] 1 : HD300, NWDR, NX Series NT304, NT314, HD600/700 1 to 4 :GXE500, GXE100, Network Camera	Preset position number When command is specified to “0, 1, 2, 3, 7, 10”, data is ignored even if having a value. When command is specified to “4, 6”, “0 : Home position” cannot be set. For preset sequences, if data is specified as an out-of-range value, it works as data = 1.
mode	0 : blocking Except 0 : Non-blocking	Blocking mode. When calling this method with non-blocking mode, OnOpStatusCB needs to have implementation, and OnOpStatusCBEnable needs to be set to “1” to get a result.

Return value

0	Success
Except 0	Error code

Error

Error is defined by the return value.
Get the error information by OnError event.

Note

The target device doesn’t support the specified control, PS-API returns error.
Depending on the camera model, a PoE + (compliant with IEEE802.3at) / PoE ++ (compliant with IEEE802.3bt) compatible hub or power supply device may be required.Please refer to the device manual.

When controlling HD300, HD600/700 or encoder, any control return success but the behavior depends on the analog camera models.
When controlling HD300, HD600/700 or encoder, Auto pan and Auto track return success but the behavior depends on the analog camera setting.
In case that the target device is HD300, HD600/700 or encoder, the got status information isn’t same as the device behavior because the behavior depends on the analogcamera setting.
In case of Call preset, if "data" (the preset position number) that doesn’t have a position is specified, Camera will not work.
In case that the target device is HD300, HD600/700 or encoder, even if the related analog camera doesn't support 65 or higher preset position number, PS-API doesn't return error.
In case that the target device is X4571 even if the Super Dynamic doesn't support “2 : ON(High)” PS-API doesn't return error.
When using Set preset during Auto pan, PS-API returns error.
When using Set Preset during Auto track, Auto track stops.

When using 360-degree Network Camera, please refer to “4.7 About 360-degree Network Camera”.

Sequence

6.5 CameraOperation

Sample program code

[Visual Basic 2012] ..¥Sample Program¥PS-API¥Visual Basic 2012¥005_CameraOperation
[Visual C# 2012] ..¥Sample Program¥PS-API¥Visual CSharp¥ 005_CameraOperation
[HTML] ..¥Sample Program¥PS-API¥HTML¥005_CameraOperation

Reference

5.6.1.5. GetCameraOperationStatus

Object	**PSAPI Control**
Method	**GetCameraOperationStatus**

```
long    GetCameraOperationStatus(
                                 long    channel
                                 );
```

Description

Get the camera operation status such as auto track, auto pan.

Argument

channel	1 : Network Camera, GXE100 1 to 4 : Encoder NX100, NU101 1 to 8 : NU201 1 to 16 : ND200, HD300, HD600/700, NU300/301 1 to 24 : NV200, NV250 1 to 32 : ND300, NV300, NX200, NX300, NX310 1 to 64 : ND400, NX410 1 to 128 : NX400, NX510	Specify the video channel

Return value

-1	Fail to get status.
0	No operation
1	Auto track
2	Auto pan
9	Preset sequence
10	Auto sort
11	Patrol

Error

Get the error information by OnError event.

Note

In case that the target device is HD300, HD600/700 or encoder, the got status information isn't same as the device behavior because the behavior depends on the camera setting.
This method returns the status of camera control that is controlled from own instance. When the target camera is controlled by Web browser or other instances, the gotten status may be different from the device status.

Sequence

Sample program code

Reference

5.6.1.6. CameraCentering

Object	**PSAPI Control**
Method	**CameraCentering**

```
long    CameraCentering (
                long    channel,
                long    xPosition,
                long    yPosition,
                long    imageWidth,
                long    imageHeight
                        );
```

Description

Control the camera to the specified position becomes the center.

Argument

channel	1 : Network Camera, GXE100 1 to 4 : Encoder NX100, NU101 1 to 8 : NU201 1 to 16 : ND200, HD300, HD600/700, NU300/301 1 to 24 : NV200, NV250 1 to 32 : ND300, NV300, NX200, NX300, NX310 1 to 64 : ND400, NX410 1 to 128 : NX400, NX510	Specify the video channel.
xPosition	0 and over	Specified the x position that becomes center, when the top left corner of the displayed screen is as original position. xPosition value should be less than imageWidth value. (Pixcel scale)
yPosition	0 and over	Specified the y position that becomes center, when the top left corner of the displayed screen is as original position. yPosition value should be less than imageHeight value. (Pixcel scale)
imageWidth	0 and over	Specify the displayed screen width. (Pixcel scale)
imageHeight	0 and over	Specify the displayed screen height. (Pixcel scale)

Return value

0	Success
Except 0	Error code

Error

Error is defined by the return value.
Get the error information by OnError event.

Note

The precision of centering depends on a target device.
Depending on the camera model, a PoE + (compliant with IEEE802.3at) / PoE ++ (compliant with IEEE802.3bt) compatible hub or power supply device may be required.Please refer to the device manual.

When using digital zoom function, please specify the positions that is translated to the once position.
When controlling the analog camera via a HD300, HD600/700 or Encoder, error will not occur though the target analog camera doesn't support the operations.
If specifying black panel area to xPosition and yPosition, error occurs.

When using 360-degree Network Camera, please refer to "4.7 About 360-degree Network Camera".

In the case of the X6533 and S6532, use a PoE+ hub / device that is compliant with IEEE802.3at standard when Return value = -32238707.

Sequence

Sample program code

Reference

5.6.1.7. CameraAuxControl

Object	**PSAPI Control**
Method	**CameraAuxControl**

```
long    CameraAuxControl (
                    long    channel,
                    long    alarmTrmNo,
                    long    command
                  );
```

Description

Control the AUX terminal of network camera and encoder to OPEN/CLOSE.

Argument

channel	1 : Network Camera 1to 4 : Encoder	Specify the video channel.
almTrmNo	0 : AUX terminal of network camera or encoder 1 : AUX terminal 1 of the camera that is connected with encoder 2 : AUX terminal 2 of the camera that is connected with encoder	Specify the controlled terminal number. In case of network camera, if this parameter is set to “1” or “2”, it is ignored.
command	0 : CLOSE 1 : OPEN	Open or Close of the AUX terminal.

Return value

0	Success
Except 0	Error code

Error

Error is defined by the return value.
Get the error information by OnError event.

Note

When controlling AUX terminal, the terminal alarm setting of network camera and encoder should be set to “AUX output”. About the setup method, please refer to the operating Instructions for a target device.

Sequence

Sample program code

Reference

5.6.1.8. GetCameraAuxStatus

Object	**PSAPI Control**
Method	**GetCameraAuxStatus**

```
long    GetCameraAuxStatus (
                    long    channel,
                    long    alarmTrmNo
                );
```

Description

Get AUX terminal status of camera and encoder.

Argument

channel	1 : Network Camera 1to 4 : Encoder	Specify the video channel.
almtrmno	0 : AUX terminal of network camera or encoder	

Return value

-1	Fail to get status.
0	CLOSE
1	OPEN
2	AUX setting of camera is set to “OFF”
3	Status unsupported

Error

Error is defined by the return value.
Get the error information by OnError event.

Note

In case of NT304 and NT314, it returns “3 : Status unsupported”.

Sequence

Sample program code

Reference

5.6.1.9. SetCameraImageCap

Class	**IPSAPI**
Method	**SetCameraImageCap**

```
long    SetCameraImageCap (
                    long    mode,
                    long    installation
                    );
```

Description

Set a Image capture mode and installation of camera.

Argument

mode	{SF438,SF448,SF458} 0 : 3M Fisheye 1 : 1.3M Fisheye 2 : 1.3M Single PTZ 3 : 1.3M Quad PTZ 4 : 2M Panorama 5 : 1M Panorama 6 : 2M Double Panorama 7 : 1M Double Panorama 8 : 4 Stream [SFV481] 10 : 9M Fisheye 11 : 4M Fisheye 12 : Single PTZ 13 : Quad PTZ 14 : Panorama 15 : Double Panorama 16 : 4 Stream [S4550,S4551, S4556] 20 : Fisheye 21 : Single PTZ 22 : Quad PTZ 23 : Panorama 24 : Double Panorama 25 : 4 Stream [X4571,X4573, S4576] 30 : Fisheye 31 : Single PTZ 32 : Quad PTZ 33 : Panorama 34 : Double Panorama 35 : 4 Stream	Set a Image capture mode.

installation	0 : Ceiling 1 : Wall	Set a installation.

Return value

0	Success
Except 0	Error code

Error

Error is defined by the return value.
Get the error information by OnError event.

Note

Combination of Image Capture Mode and Installation Settings.

[SF438,SF448,SF458]

Installation / Mode	Ceiling	Wall
3M Fisheye	Yes	Yes
1.3M Fisheye	Yes	Yes
1.3M Single PTZ	Yes	Yes
1.3M Quad PTZ	Yes	Yes
2M Panorama	N/A	Yes
1M Panorama	N/A	Yes
2M Double Panorama	Yes	N/A
1M Double Panorama	Yes	N/A
4 Stream	Yes	N/A

[SFV481]

Installation / Mode	Ceiling	Wall
9M fisheye	Yes	Yes
4M fisheye	Yes	Yes
Single PTZ	Yes	Yes
Quad PTZ	Yes	Yes
Panorama	N/A	Yes
Double Panorama	Yes	N/A
4 Stream	Yes	N/A

[S4550, S4551, S4556, S4576, X4571, X4573]

Installation / Mode	Ceiling	Wall
Fisheye	Yes	Yes
Single PTZ	Yes	Yes
Quad PTZ	Yes	Yes
Panorama	N/A	Yes
Double Panorama	Yes	N/A
4 Stream	Yes	N/A

If SetCameraImageCap method is called during displaying the video images, the live video transmission from NW camera stops.
When setting image capture mode and installation, please stop playing the live with PlayControl method before SetCameraImageCap method is called.

Sequence

Sample program code

Reference

5.6.1.10. CameraWiperControl

Class	**IPSAPI**
Method	**CameraWiperControl**

```
long    CameraWiperControl(
                    long    channel,
                    long    command
                );
```

Description

Operate wiper functions of the camera.

Argument

channel	1 : Network Camera, 1 to 4 : NX100, NU101 1 to 8 : NU201 1 to 16 : NU300/301 1 to 24 : NV250 1 to 32 : NV300, NX200, NX300, NX310 1 to 64 : ND400, NX410 1 to 128 : NX400, NX510	Specify the video channel.
command	0 : Stop 1 : Low 2 : High 3 : 1 shot 4 : Washer	Specify the wiper operation mode.

Return value

0	Success
Except 0	Error code

Error

Error is defined by the return value.
Get the error information by OnError event.

Note

SUD638 can be operated.

Sequence

Sample program code

Reference

5.6.2. Property

5.6.2.1. OnOpStatusEnable

Object	**PSAPI Control**
Property	**OnOpStatusEnable**

long OnOpStatusEnable

Description

Set/Get the setting whether use the OnOpStatus event or not.

Value

	0 : Not use event Except 0 : Use event	Default value is 0.

Return value

None

Error

Note

Sequence

Sample program code

Reference

5.6.2.2. OnOpStatusCBEnable

Object	**PSAPI Control**
Property	**OnOpStatusCBEnable**

long OnOpStatusCBEnable

Description

Set/Get the setting whether use the OnOpStatusCB event or not.

Value

0 : Not use event Except 0 : Use event	Default value is 0.

Return value

None

Error

Note

Sequence

Sample program code

Reference

5.6.2.3. CameraPosPan

Object	**PSAPI Control**
Property	**CameraPosPan**
long	CameraPosPan

Description

Store the Pan position value that is gotten by calling GetCameraPosition.

Value

-475 to 3599	Pan position value -475 : -47.5 [degree] (Left) 3599 : 359.9 [degree] (Right) *** The direction of Pan is for ceiling setting mode. (The camera is to be installed with the dome side down.)**

Return value

None

Error

Note

Sequence

6.5 CameraOperation

Sample program code

[Visual Basic 2012] ..¥Sample Program¥PS-API¥Visual Basic 2012¥005_CameraOperation
[Visual C# 2012] ..¥Sample Program¥PS-API¥Visual CSharp¥ 005_CameraOperation
[HTML] ..¥Sample Program¥PS-API¥HTML¥005_CameraOperation

Reference

5.6.2.4. CameraPosTilt

Object	**PSAPI Control**
Property	**CameraPosTilt**
long	CameraPosTilt

Description

Store the Tilt position value that is gotten by calling GetCameraPosition.

Value

-450 to 900	Tilt position value -450 : -45 [degree] (Upper) 900 : 90 [degree] (Lower) *** The direction of Tilt is for ceiling setting mode. (The camera is to be installed with the dome side down.)**

Return value

None

Error

Note

When NS202/NS202A/SC385/SC386/SW395/SW396/SW598/SC588 (Network Camera) is set to “desktop setting mode” (the camera is to be installed with the dome side up), Lower is the plus value of Tilt and Upper is the minus value of Tilt.

Sequence

6.5 CameraOperation

Sample program code

[Visual Basic 2012] ..¥Sample Program¥PS-API¥Visual Basic 2012¥005_CameraOperation
[Visual C# 2012] ..¥Sample Program¥PS-API¥Visual CSharp¥ 005_CameraOperation
[HTML] ..¥Sample Program¥PS-API¥HTML¥005_CameraOperation

Reference

5.6.2.5. CameraPosZoom

Object	**PSAPI Control**
Property	**CameraPosZoom**

long CameraPosZoom

Description

Store the Zoom position value that is gotten by calling GetCameraPosition.

Value

10 to 10800	Zoom position value 10 : x1 10800 : x1080

Return value

None

Error

Note

Sequence

6.5 CameraOperation

Sample program code

[Visual Basic 2012] ..¥Sample Program¥PS-API¥Visual Basic 2012¥005_CameraOperation
[Visual C# 2012] ..¥Sample Program¥PS-API¥Visual CSharp¥ 005_CameraOperation
[HTML] ..¥Sample Program¥PS-API¥HTML¥005_CameraOperation

Reference

5.6.2.6. CameraPosFocus

Object	**PSAPI Control**
Property	**CameraPosFocus**
long	CameraPosFocus

Description

Store the Focus position value that is gotten by calling GetCameraPosition.

Value

1 to 9999	Focus position value 1 : 0.1 [m] 9999 : 999.9 [m]

Return value

None

Error

Note

Sequence

6.5 CameraOperation

Sample program code

[Visual Basic 2012] ..¥Sample Program¥PS-API¥Visual Basic 2012¥005_CameraOperation
[Visual C# 2012] ..¥Sample Program¥PS-API¥Visual CSharp¥ 005_CameraOperation
[HTML] ..¥Sample Program¥PS-API¥HTML¥005_CameraOperation

Reference

5.6.3. Event

5.6.3.1. OnOpStatus

Object	**PSAPI Control**
Event	**OnOpStatus**

```
void    OnOpStatus (
                long    channel,
                long    status
                );
```

Description

The OnOpStatus notification function is to pass camera operation status from PS-API to the application.

Argument

channel	1 : Network Camera, GXE100 1 to 4 : Encoder NX100, NU101 1 to 8 : NU201 1 to 16 : ND200, HD300, HD600/700, NU300/301 1 to 24 : NV200, NV250 1 to 32 : ND300, NV300, NX200, NX300, NX310 1 to 64 : ND400, NX410 1 to 128 : NX400, NX510	Specify the video channel.
status	0 : No operation 1 : Auto track 2 : Auto pan 9 : Preset sequence 10 : Auto sort 11 : Patrol	Specify a device operation status value.

Return value

None

Error

Note

Please don’t use PS-API functions in the notified event.
In case that the target device is HD300, HD600/700 or encoder, the got status information isn’t same as the device behavior because the behavior depends on the camera setting.

Sequence

Sample program code

Reference

5.6.3.2. OnOpStatusCB

Object	**PSAPI Control**
Event	**OnOpStatusCB**

```
void    OnOpStatusCB (
                long    status
                );
```

Description

Notify the camera operation status change to the application when CameraOperation method runs with non-blocking mode.

.

Argument

status	-1 : Fail to get status. 0 : No operation 1 : Auto track 2 : Auto pan 9 : Preset sequence 10 : Auto sort 11 : Patrol	Specify a device operation status value.

Return value

None

Error

Note

Please don’t use PS-API functions in the notified event.
In case that the target device is HD300, HD600/700 or encoder, the got status information isn’t same as the device behavior because the behavior depends on the camera setting.

Sequence

Sample program code

Reference

5.7. Alarm Group

5.7.1. Method

5.7.1.1. AlarmOperation

Object	**PSAPI Control**
Method	**AlarmOperation**

```
long    AlarmOperation(
                long    channel,
                long    command,
                long    mode
                );
```

Description

Reset current device alarm state.
Or trigger a device alarm by the application.
Trigger operation is valid to only NWDR and NX Series.
Not used and alarm reset is valid to all devices.

Argument

channel	[Trigger ON/OFF] 1 to 16 : ND200, HD600/700 1 to 24 : NV200 1 to 32 : ND300 1 to 64 : ND400 1 to 128 : NV300, NV250, NX Series [Alarm reset] 1 : Network Camera, GXE100 1 to 4 : Encoder 1 to 16 : ND200, HD300 HD600/700 1 to 24 : NV200 1 to 32 : ND300 1 to 64 : ND400 1 to 128 : NV300, NV250, NX Series	Specify the video channel.
command	0 : not used. 1 : alarm reset 2 : trigger on 3 : trigger off all channels 4 : trigger off specified channel	

Argument

mode	0 : blocking Except 0 : Non-blocking	Blocking mode. When calling this method with non-blocking mode, OnAlmStatusCB needs to have implementation, and OnAlmStatusCBEnable needs to be set to “1” to get a result.

Return value

0	Success to start an operation
Except 0	Error code

Error

Error is defined by the return value.
Get the error information by OnError event.

Note

・In cace of command=1/3/4 is excuted ,Alarm and Event Recording status will be below.

command	Result	
	Alarm Status	Event Recording *1
1	Reset	Turn off recording all channels
3	Reset	Turn off recording all channels
4	Reset	Turn off recording specified channel

*1 Only Event Recording Turn off

Sequence

6.6 AlmOperation

Sample program code

[Visual Basic 2012] ..¥Sample Program¥PS-API¥Visual Basic 2012¥006_AlmOperation
[Visual C# 2012] ..¥Sample Program¥PS-API¥Visual CSharp¥ 006_AlmOperation
[HTML] ..¥Sample Program¥PS-API¥HTML¥006_AlmOperation

Reference

5.7.1.2. GetAlarmStatus

Object	**PSAPI Control**
Method	**GetAlarmStatus**

long GetAlarmStatus( );

Description

Get current alarm information.

Argument

None

Return value

-1	Fail to get status.
0	Reset
1	Active
2	Status unsupported (In case of Network Camera or Encoder)

Error

Get the error information by OnError event.

Note

Sequence

Sample program code

Reference

5.7.2. Property

5.7.2.1. OnAlmStatusEnable

Object	**PSAPI Control**
Property	**OnAlmStatusEnable**

long OnAlmStatusEnable

Description

Set/Get the setting whether use the OnAlmStatus event or not.

Value

	0 : Not use event	Default value is 0.
	Except 0 : Use event	

Return value

None

Error

Note

Sequence

Sample program code

Reference

5.7.2.2. OnAlmStatusCBEnable

Object	**PSAPI Control**
Property	**OnAlmStatusCBEnable**

long OnAlmStatusCBEnable

Description

Set/Get the setting whether use the OnAlmStatusCB event or not.

Value

0 : Not use event Except 0 : Use event	Default value is 0.

Return value

None

Error

Note

Sequence

Sample program code

Reference

5.7.3. Event

5.7.3.1. OnAlmStatus

Object	**PSAPI Control**
Event	**OnAlmStatus**

```
void    OnAlmStatus(
                long    channel,
                long    type,
                BSTR    timeDate,
                long    status
                );
```

Description

The alarm status change notification function is to pass alarm status from PS-API to the application.

Argument

channle	0 : No channel 1 : Network Camera, GXE100 1 to 4 : Encoder 1 to 16 : ND200, HD300, HD600/700 1 to 24 : NV200 1 to 32 : ND300 1 to 64 : ND400 1 to 128 : NV300, NV250, NX Series 1 to 32 : Terminal number	Specify a video channel or terminal number for the device.
type	0 : Terminal alarm 1 : Video loss alarm 2 : VMD alarm 3 : Command alarm 4 : Other	Specify an alarm trigger type.
tiemDate	Local time	Local time when an alarm trigger happens.
status	0 : Reset 1 : Active 2 : Status unsupported (In case of Network Camera or Encoder)	Specify the current alarm operation state.

Return value

None

Error

Note

Please don’t use PS-API functions in the notified event.
In case of Network camera or encoder, even if an alarm occurs or alarm is reset, OnAlmStatus will not occur because alarm status information isn’t supported.
In case of HD300, OnAlmStatus will not occur by emergency events.

Sequence

Sample program code

Reference

5.7.3.2. OnAlmStatusCB

Object	**PSAPI Control**
Event	**OnAlmStatusCB**

```
void    OnAlmStatusCB (
                long    status
                );
```

Description

Notify the alarm status change to the application when AlarmOperation method runs with non-blocking mode.

Argument

status	-1 : Fail to get status. 0 : Reset 1 : Active 2 : Status unsupported (In case of Network Camera or Encoder)	Specify the current alarm operation state.

Return value

None

Error

Note

Please don’t use PS-API functions in the notified event.

Sequence

Sample program code

Reference

5.8. FTP Group

5.8.1. Method

5.8.1.1. FtpGet

Object **PSAPI Control**

Method

```
long    FtpGet(
            long    channel,
            char*   startTimeDate,
            char*   endTimeDate,
            long    dataType,
            long    eventType,
            char*   fileName,
            long&   status,
            long    mode,
            IAppCallBack*   pSender
            );
```

Description

Get video, audio and recording event information data from a target device via FTP.

This method does not work with NX Series.
NX100,NX200,NX300,NX400 doesn't work V5.00 or later versions.
Other NX Serise doesn't work V1.00 or later versions.
Please use “5.4.1.45 HttpDownload”.

Argument

channel	1 to 4 : NX100 1 to 16 : ND200, HD300, HD600/700 1 to 24 : NV200, NV250 1 to 32 : ND300, NV300, NX200, NX300 1 to 64 : ND400 1 to 128 : NX400	Specify the video channel.
startTimeDate	yyyy/mm/dd hh:mm:ss	Download the recording data that started recording after the specified time.
endTimeDate	yyyy/mm/dd hh:mm:ss	Download the recording data that start recording before the specified time. Please specify the duration between startTimeDate and endTimeDate within 30 minutes(except for NX Series) or 60 minutes(in case of NX Series).
dataType	0 : Video 1 : Video and Audio 2 : Recording event information	Specify the downloaded data type

Argument

eventType

Bit 0 to Bit 14 :

Bit 0 : Emergency (EMR)
Bit 1 : Manual (MAN)
Bit 2 : Schedule (SCH)
Bit 3 : Terminal (TRM)
Bit 4 : Command alarm (COM)
Bit 5 : Camera site alarm (CAM/SITE)
* In case of HD300, Bit5 is VMD.
Bit 6 : SD Backup (SD)
Bit 7 : Video Loss (LOSS)
Bit 8 : VMD alarm (VMD)

Bit 9 : Motion alarm (CMTN)
Bit 10 : Loitering alarm (CSTY)
Bit 11 : Removal alarm (CRMV)
Bit 12 : Scene change alarm (CSCD)
Bit 13 : Terminal alarm (CTRM)
Bit 14 : Direction alarm (CDRT)

Bit 15 to Bit 32 : Reserved

Specify the recording event kind by 32 digit binary.

Bit	HD300	ND200 ND300 ND400	NV200 NV250 NV300	HD600 HD700	NX100 NX200 NX300 NX400
0	EMR	EMR	-	EMR	EMR
1	MAN	MAN	-	MAN	-
2	SCH	SCH	SCH	SCH	SCH
3	TRM	TRM	TRM	TRM	TRM
4	COM	COM	COM	COM	COM
5	**(VMD)**	**CAM**	**CAM**	**SITE**	**CAM**
6	-	**SD**	-		**SD**
7	**LOSS**	-	-	**LOSS**	-
8	**VMD**	-	-	**VMD**	-
9	-	-	-	**CMTN**	-
10	-	-	-	**CSTY**	-
11	-	-	-	**CRMV**	-
12	-	-	-	**CSCD**	-
13	-	-	-	**CTRM**	-
14	-	-	-	**CDRT**	-

Bit map format

MSB	-	-		-	-	-	LSB
0	0	0	…	0	0	0	0
Bit	Bit	Bit	…	Bit	Bit	Bit	Bit
31	30	29		3	2	1	0

e.g. Emergency + Terminal
[Binary] 0001001 ---> type = 9

Except for NX Series, SD backup search and the other type search cannot be used together at the same time.
If specifying "1" to the other bits, SD backup are ignored.
In case of NWDR and NX Series, Bit7 is ignored if it is set to “1”.
In case of HD300, Bit6 is ignored if it is set to “1”.
In case of HD300, Bit5 or Bit8 is VMD alarm event search.

Argument

fileName	Character strings (251 byte or less)	Specify a complete file path, and file name without extension for storing the downloaded video. **An extension is added automatically.**
mode	0 : blocking Except 0 : Non-blocking	Blocking mode.

Return value

0	Success
Except 0	Error code

Error

Error is defined by the return value.
Get the error information by OnError event.

Note

While executing FtpGet method with non-blocking mode, FtpGet method cannot be called from the same instance. The second FTP download starts after the first FTP download finished.
By executing FtpGet method, FTP server mode of a target device turns on. If you want to turn off FTP server mode, please call FtpServerClose method.
If there is no recording data in a target device between the specified times, PS-API creates an empty file.
If there is the same name file on the specified complete file path, it is overwritten.
When TRM/CMD/CAM/SITE/VMD/LOSS/CMTN/CSTY/CRMV/CSCD/CTRM/CDRT are specified in FTP download condition, all event pre recording data that exist between the specified time are included in the downloaded file.
In case of ND400, FTP connection is disconnected after 1 hour from starting FTP download and the unfinished file is deleted.
In case of HD600/700, the start time of downloaded data is before 12 seconds of the specified startTimeDate time.
The size of one downloaded file should be up to 1.86 GByte.
When downloading the recorded video which is high resolution/bitrate, please set the duration to be short .

It is necessary that “5.2.2.1 DevicdeType”, “5.2.2.2 IPAddr”, “5.2.2.3 HttpPort”, “5.2.2.10 UserName” and “5.2.2.11 Password” are specified to download the recording data via FTP from HD300, NWDR, HD600/700 or NX Series.

During FTP download form NX Series, FTP download may fail due to the effect of stanby HDD. (FTP 100 Response: 551 Error on input file: Input/output error.) Please re-execute at the time.

Sequence

Sample program code

Reference

5.8.1.2. FtpCancel

Object	**PSAPI Control**
Method	**FtpCancel**

long FtpCancel();

Description

Cancel the ftp download.
This function doesn't disconnect from a target device.
If needs to log out, please call Close method or Disconnect method.

Argument

None

Return value

0	Success
Except 0	Error code

Error

Error is defined by the return value.
Get the error information by OnError event.

Note

Sequence

Sample program code

Reference

5.8.1.3. FtpServerClose

Object	**PSAPI Control**
Method	**FtpServerClose**

long FtpServerClose();

Description

Turn off the FTP server mode of a target device.

Argument

None

Return value

0	Success
Except 0	Error code

Error

Error is defined by the return value.
Get the error information by OnError event.

Note

The device has one FTP server mode.
When the FTP server mode is turned off from one instance, other instances stop downloading even if they are getting data.
If calling FtpServerClose method without login to a target device(UID=-1), the PS-API instance gets a UID from PS-API in during changing the FTP server mode.

HD300 , ND400 , ND300 , NV250, NV300, NV200, NX Series and HD600/700 can’t turn off the FTP server mode by FTPServerClose() method.

Sequence

Sample program code

Reference

5.8.1.4. GetFtpStatus

Object	**PSAPI Control**
Method	**GetFtpStatus**

long GetFtpStatus();

Description

Get current ftp downloading status.

Argument

None

Return value

-1	Fail to get status.
0	No getting data via ftp.
1	In getting data via ftp

Error

Get the error information by OnError event.

Note

Sequence

Sample program code

Reference

5.8.1.5. GetFtpTransRate

Object	**PSAPI Control**
Method	**GetFtpTransRate**

long GetFtpTransRate();

Description

Get current transmission speed [byte/s] of FTP downloading.

Argument

None

Return value

-1	Fail to get status.
0 or more	Transfer rate [byte/s]

Error

Get the error information by OnError event.

Note

Sequence

Sample program code

Reference

5.8.1.6. GetFtpTransByte

Object	**PSAPI Control**
Method	**GetFtpTransByte**

long GetFtpTransByte();

Description

Get the amount of transferred data [byte] from a target device.

Argument

None	None

Return value

-1	Fail to get status.
0 or more	Transferred bytes. [byte]

Error

Get the error information by OnError event.

Note

Sequence

Sample program code

Reference

5.8.2. Property

5.8.2.1. FtpPort

Object	**PSAPI Control**
Property	**FtpPort**

long FtpPort

Description

Set FTP server port number of a target device into PS-API.
Get FTP server port number of a target device from PS-API.

Value

1 to 65535	Ftp server port. Default value is 21.

Return value

None

Error

Note

It is necessary that “5.2.2.1 DevicdeType”, “5.2.2.2 IPAddr”, “5.2.2.3 HttpPort”, “5.2.2.10 UserName” and “5.2.2.11 Password” are specified to download the recording data via FTP from HD300, NWDR, HD600/700 or NX Series.

Sequence

Sample program code

Reference

5.8.2.2. FtpTransMode

Object	**PSAPI Control**
Property	**FtpTransMode**
long	FtpTransMode

Description

Set ftp transmission mode into PS-API.
Get ftp transmission mode from PS-API.

Value

0 : passive 1 : active	Ftp transmission mode. Default value is 0.

Return value

None

Error

Note

Sequence

Sample program code

Reference

5.8.2.3. OnFtpStatusCBEnable

Object	**PSAPI Control**
Property	**OnFtpStatusCBEnable**
long	OnFtpStatusCBEnable

Description

Set/Get the setting whether use the OnFtpStatusCB event or not.

Value

0 : Not use event Except 0 : Use event	Default value is 0.

Return value

None

Error

Note

Sequence

Sample program code

Reference

5.8.3. Event

5.8.3.1. OnFtpStatusCB

Object	**PSAPI Control**
Event	**OnFtpStatusCB**

```
void    OnFtpStatusCB (
                long    status
                );
```

Description

Notify the completion of download to the application when FtpGet method runs with non-blocking mode.

Argument

status	-1 : Fail to get status. 0 : No getting data via ftp. 1 : In getting data via ftp	FTP download status

Return value

None

Error

Note

Please don’t use PS-API functions in the notified event.

Sequence

Sample program code

Reference

5.9. MouseEvent Group

5.9.1. Property

5.9.1.1. MouseDownEnable

Object	**PSAPI Control**
Property	**MouseDownEnable**

long MouseDownEnable

Description

Set/Get the setting whether use the MouseDown event or not.

Value

0 : Not use event Except 0 : Use event	Default value is 0.

Return value

None

Error

Note

Sequence

Sample program code

Reference

5.9.1.2. MouseUpEnable

Object	**PSAPI Control**
Property	**MouseUpEnable**

long MouseUpEnable

Description

Set/Get the setting whether use the MouseUp event or not.

Value

0 : Not use event Except 0 : Use event	Default value is 0.

Return value

None

Error

Note

Sequence

Sample program code

Reference

5.9.1.3. DblClickEnable

Object	**PSAPI Control**
Property	**DblClickEnable**

long DblClickEnable

Description

Set/Get the setting whether use the DblClick event or not.

Value

0 : Not use event Except 0 : Use event	Default value is 0.

Return value

None

Error

Note

Sequence

Sample program code

Reference

5.9.1.4. MouseMoveEnable

Object	**PSAPI Control**
Property	**MouseMoveEnable**

long MouseMoveEnable

Description

Set/Get the setting whether use the MouseMove event or not.

Value

0 : Not use event Except 0 : Use event	Default value is 0.

Return value

None

Error

Note

Sequence

Sample program code

Reference

5.9.1.5. MouseWheelEnable

Object	**PSAPI Control**
Property	**MouseWheelEnable**

long MouseWheelEnable

Description

Set/Get the setting whether use the MouseWheel event or not.

Value

0 : Not use event Except 0 : Use event	Default value is 0.

Return value

None

Error

Note

Sequence

Sample program code

Reference

5.9.2. Event

5.9.2.1. MouseDown

Object	**PSAPI Control**
Event	**MouseDown**

```
void    MouseDown(
                short   Button,
                short   Shift,
                short   x,
                short   y
                );
```

Description

This event occurs when the mouse pointer is onto OCX control and the mouse button is down.

Argument

Button	1 : Left button 2 : Right button 3 : Left + right button 4 : Center button	Mouse button that event occurred.
Shift	1 : Shift key 2 : CTRL key 3 : Shift + CTRL key	Pushed key
x	0 or more	X position of current mouse pointer.
y	0 or more	Y position of current mouse pointer.

Return value

None

Error

Note

Sequence

Sample program code

Reference

5.9.2.2. MouseUp

Object	**PSAPI Control**
Event	**MouseUp**

```
void    MouseUp(
                short   Button,
                short   Shift,
                short   x,
                short   y
                );
```

Description

This event occurs when the mouse pointer is onto OCX control and the mouse button is up.

Argument

Button	0 : None 1 : Left button 2 : Right button 3 : Left + right button 4 : Center button	Mouse button that event occurred. e.g. Notify “0”, when mouse button is up. Notify “1”, when mouse button is up during Left button pushed.
Shift	1 : Shift key 2 : CTRL key 3 : Shift + CTRL key	Pushed key
x	0 or more	X position of current mouse pointer.
y	0 or more	Y position of current mouse pointer.

Return value

None

Error

Note

Sequence

Sample program code

Reference

5.9.2.3. DblClick

Object	**PSAPI Control**
Event	**DblClick**

```
void    DblClick(
                short   Button,
                short   Shift,
                short   x,
                short   y
                );
```

Description

This event occurs when the mouse pointer is onto OCX control and the mouse button is double clicked.

Argument

Button	1 : Left button 2 : Right button 3 : Left + right button 4 : Center button	Mouse button that event occurred.
Shift	1 : Shift key 2 : CTRL key 3 : Shift + CTRL key	Pushed key
x	0 or more	X position of current mouse pointer.
y	0 or more	Y position of current mouse pointer.

Return value

None

Error

Note

Sequence

Sample program code

Reference

5.9.2.4. MouseMove

Object	**PSAPI Control**
Event	**MouseMove**

```
void    MouseMove(
                short   Button,
                short   Shift,
                short   x,
                short   y
                );
```

Description

This event occurs when the mouse pointer is onto OCX control and the mouse pointer is moved.

Argument

Button	0 : None 1 : Left button 2 : Right button 3 : Left + right button 4 : Center button	Mouse button that event occurred. e.g. Notify “0”, when mouse pointer is moved without pushing any button. Notify “1”, when mouse pointer is moved with pushing a button.
Shift	1 : Shift key 2 : CTRL key 3 : Shift + CTRL key	Pushed key
x	0 or more	X position of current mouse pointer.
y	0 or more	Y position of current mouse pointer.

Return value

None

Error

Note

Sequence

Sample program code

Reference

5.9.2.5. MouseWheel

Object	**PSAPI Control**
Event	**MouseWheel**

```
void    MouseWheel(
                short   Button,
                short   Shift,
                short   Wheel,
                short   x,
                short   y
                );
```

Description

This event occurs when the mouse pointer is onto OCX control and the mouse wheel is scrolled.

Argument

Button	0 : None 1 : Left button 2 : Right button 3 : Left + right button 4 : Center button	Mouse button that event occurred. e.g. Notify “0”, when mouse wheel is scrolled without pushing any button. Notify “1”, when mouse wheel is scrolled with pushing a button.
Shift	1 : Shift key 2 : CTRL key 3 : Shift + CTRL key	Pushed key
Wheel	Value	The rotary quantity of the mouse wheel.
x	0 or more	X position of current mouse pointer.
y	0 or more	Y position of current mouse pointer.

Return value

None

Error

Note

Sequence

Sample program code

Reference

6. Operation Procedure and Sequence

6.1. PlayLive

6.1.1. Operation Procedure

Start Live

No.	Property / Method	Parameter	Description
1	IPAddr	IP Address (BSTR)	Set IP Address into PS-API. e.g.) “192.168.0.10”
2	DeviceType	Device type (long)	Set the device type corresponding to a target device. e.g.) 2
3	HttpPort	Port number (long)	Set Http port number into PS-API. e.g.) 80
4	UserName	Character strings (BSTR)	Set user name into PS-APi. e.g.) admin
5	Password	Character strings (BSTR)	Set password into PS-API. e.g.) 12345
6	StreamFormat	Stream type (long)	Set the stream type into PS-API. In case of NWDR, set the stream type that is same with a target channel that is wanted to display. e.g.) 0

No.	Property / Method	Parameter	Description
7	JPEGResolution/ MPEG4Resolution/ H264Resolution	Resolution (long)	It is necessary that the resolution setting is same value of the device setting. e.g.) 640
8	Open/Connect	UID (long)	Connect to a target device. When getting a new UID, please use Open method.
9	(OnPlayStatusCBEnable)	0	When using PlayLive method with non-blocking mode, please set OnPlayStatusCBEnable property to “1”. If OnPlayStatusCBEnable is set to “0” in case of non-blocking mode, but application cannot receive the notification of finish processing.
10	PlayLive	Channel, Blocking mode, (long, long)	Start displaying live image. In case of network camera, please set the channel to “1”. In case of NWDR, NX Series, HD600/700 or HD300, please set the channel to number that is wanted to display. Before using PlayLive method with non-blocking mode, please set OnPlayStatusCBEnable property to “1”. If OnPlayStatusCBEnable is set to “0” in case of non-blocking mode, but application cannot receive the notification of finish processing. e.g.) 1, 0

Stop Live

No.	Property / Method	Parameter	Description
11	PlayControl	Command, Speed, Blocking mode, (long, long, long)	To stop live, set command to “1”. Set speed to “1”. Before using PlayLive method with non-blocking mode, please set OnPlayStatusCBEnable property to “1”. If OnPlayStatusCBEnable is set to “0” in case of non-blocking mode, but application cannot receive the notification of finish processing. e.g.) 1, 1, 0
12	Close/Disconnect	-	Stop the communication with the target device. When using Close method, UID will be annulled.

6.1.2. Sequence

Start Live

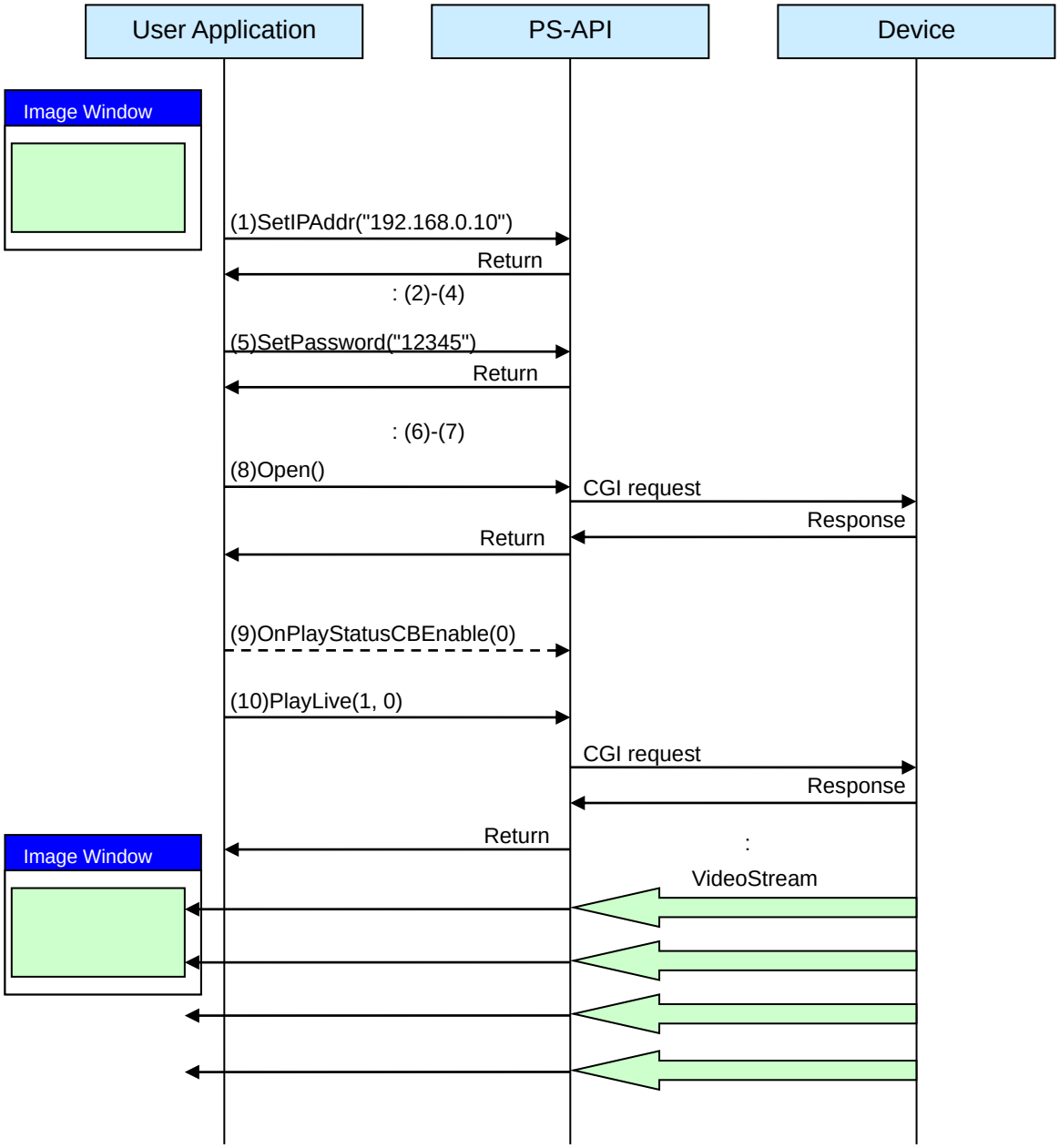

* The timing of sending CGI command is not constant, depends on the device model or the device setting.

Figure 6-1 Start Live

Stop Live

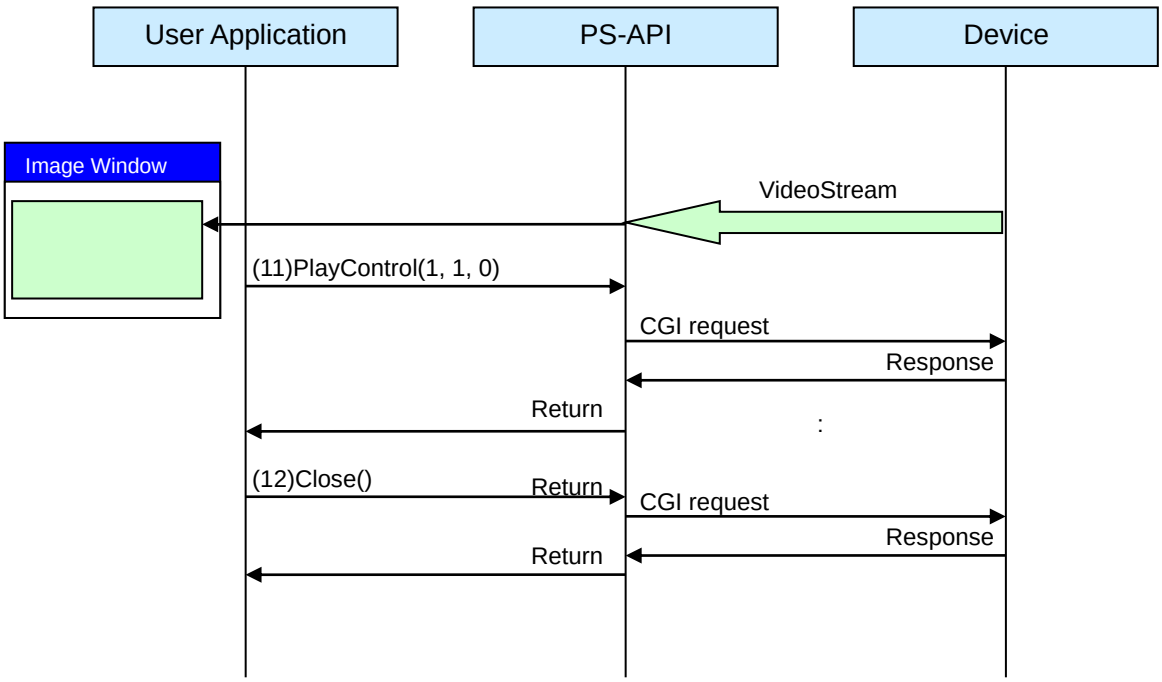

* The timing of sending CGI command is not constant, depends on the device model or the device setting.

Figure 6-2 Stop Live

6.2. Play

6.2.1. Operation Procedure

Login

No.	Property / Method	Parameter	Description
1	IPAddr	IP Address (BSTR)	Set IP Address into PS-API. e.g.) "192.168.0.250"
2	DeviceType	Device type (long)	Set the device type corresponding to a target device. e.g.) 1
3	HttpPort	Port number (long)	Set Http port number into PS-API. e.g.) 80
4	UserName	Character strings (BSTR)	Set user name into PS-APi. e.g.) ADMIN
5	Password	Character strings (BSTR)	Set password into PS-API. e.g.) 12345
6	StreamFormat	Stream type (long)	Set the stream type into PS-API. In case of NWDR, set the stream type that is same with a target channel that is wanted to display. e.g.) 0

No.	Property / Method	Parameter	Description
7	JPEGResolution/ MPEG4Resolution	Resolution (long)	It is necessary that the resolution setting is same value of the device setting. e.g.) 640
8	Open/Connect	UID (long)	Connect to a target device. When getting a new UID, please use Open method.
9	(OnPlayStatus CBEnable)	0	When using PlayLive method with non-blocking mode, please set OnPlayStatusCBEnable property to “1”. If OnPlayStatusCBEnable is set to “0” in case of non-blocking mode, but application cannot receive the notification of finish processing.

Start Recorded Video Play

No.	Property / Method	Parameter	Description
10	Play	Channel, Time and Date, Blocking mode (long, BSTR long)	Start displaying the recorded video image. In case of NWDR, NX Series, HD600/700 or HD300, please set the channel to optional number that is wanted to display. Specify the date that is wanted to play recorded video. Before using Play method with non-blocking mode, please set OnPlayStatusCBEnable property to “1”. If OnPlayStatusCBEnable is set to “0” in case of non-blocking mode, but application cannot receive the notification of finish processing. e.g.) 1, "2009/01/01 12:50:00", 0

Pause

No.	Property / Method	Parameter	Description
11	PlayControl	Command, Speed, Blocking mode (long, long, long)	To pause the recoreded video play, set command to "3".Set speed to "1". Before using PlayControl method with non-blocking mode, please set OnPlayStatusCBEnable property to “1”. If OnPlayStatusCBEnable is set to “0” in case of non-blocking mode, but application cannot receive the notification of finish processing. e.g.) 3, 1, 0

Restart the network playback (or Backward)

No.	Property / Method	Parameter	Description
12	PlayControl	Command, Speed, Blocking mode (long, long, long)	When restart the network playback, set the command to “4”. When start Backward, set the command to “5”. Set speed to "1". Before using PlayControl method with non-blocking mode, please set OnPlayStatusCBEnable property to “1”. If OnPlayStatusCBEnable is set to “0” in case of non-blocking mode, but application cannot receive the notification of finish processing. e.g.) 5, 1, 0

Start the Fast Forward (or Rewind)

No.	Property / Method	Parameter	Description
13	PlayControl	Command, Speed, Blocking mode (long, long, long)	When start Fast Forward, set the command to “8”. When start Rewind, set the command to “9”. Set speed to "1". Before using PlayControl method with non-blocking mode, please set OnPlayStatusCBEnable property to “1”. If OnPlayStatusCBEnable is set to “0” in case of non-blocking mode, but application cannot receive the notification of finish processing. e.g.) 8, 1, 0

Display the next frame (or the previous frame)

No.	Property / Method	Parameter	Description
14	PlayControl	Command, Speed, Blocking mode (long, long, long)	When display the next frame, set the command to “6”. When display the previous frame, set the command to “7”.Set speed to "1". Before using PlayControl method with non-blocking mode, please set OnPlayStatusCBEnable property to “1”. If OnPlayStatusCBEnable is set to “0” in case of non-blocking mode, but application cannot receive the notification of finish processing. e.g.) 6, 1, 0

Stop Recorded Video Play

No.	Property / Method	Parameter	Description
15	PlayControl	Command, Speed, Blocking mode (long, long, long)	When stop the network playback, set the command to “0”. Set speed to "1". Set speed to "1". Before using PlayControl method with non-blocking mode, please set OnPlayStatusCBEnable property to “1”. If OnPlayStatusCBEnable is set to “0” in case of non-blocking mode, but application cannot receive the notification of finish processing. e.g.) 0, 1, 0

Logout

No.	Property / Method	Parameter	Description
16	Close/Disconnect	-	Stop the communication with the target device. When using Close method, UID will be annulled.

6.2.2. Sequence

Login

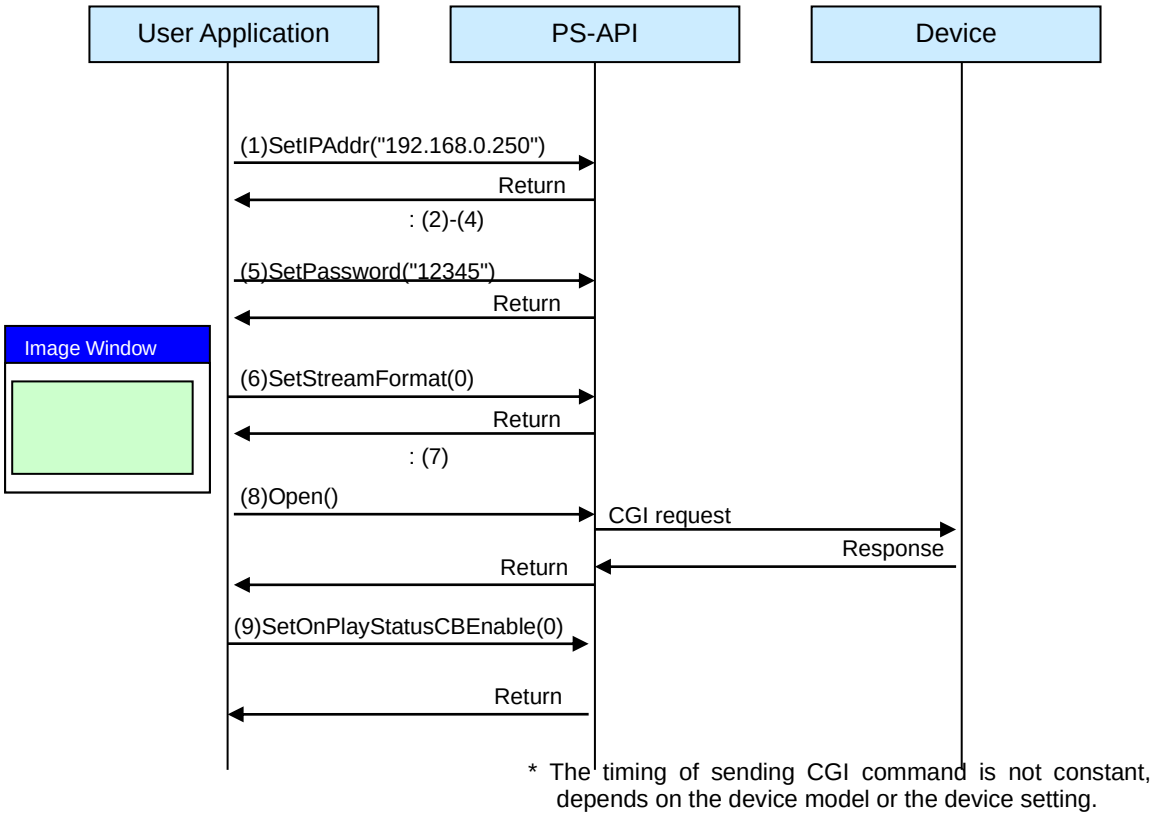

Figure 6-3 Login

Start Recorded Video Play

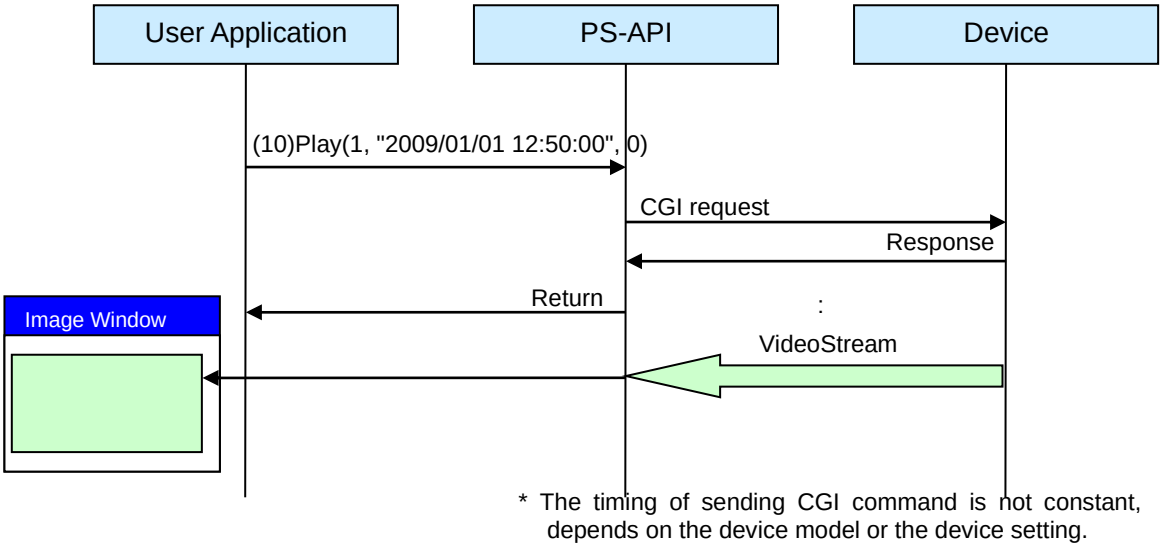

Figure 6-4 Start Recorded Video Play

Pause

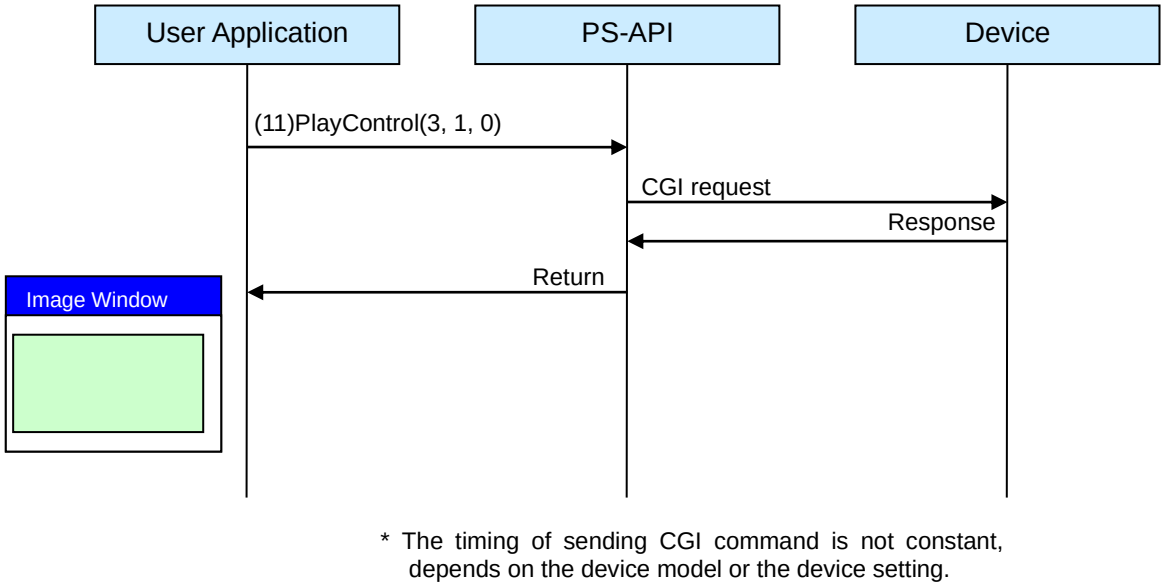

Figure 6-5 Pause

Restart the network playback (or Backward)

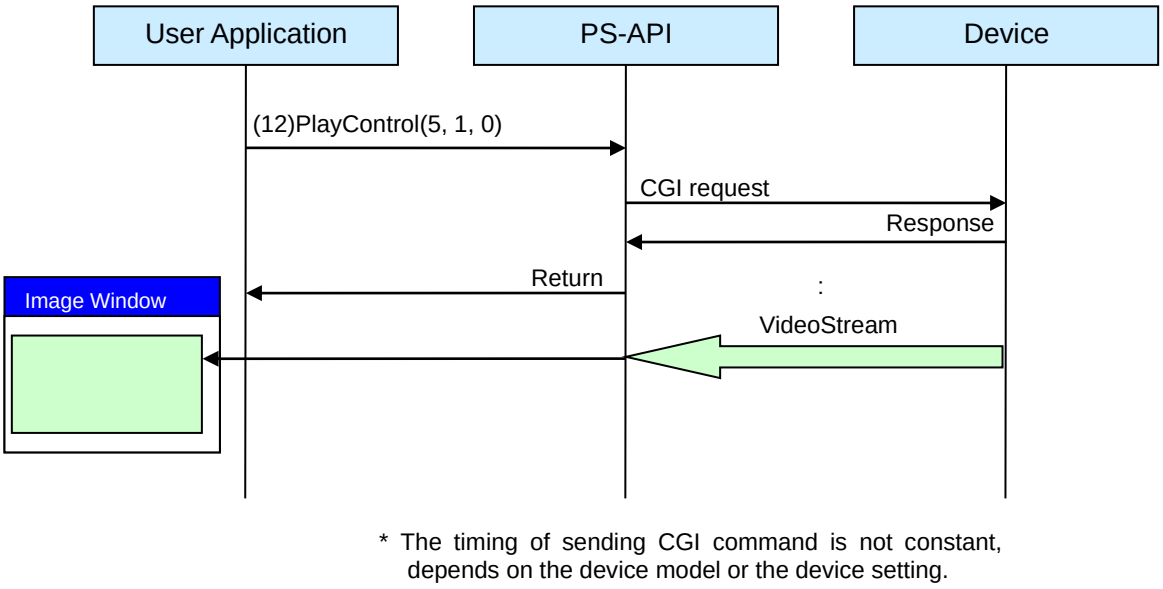

Figure 6-6 Restart the network playback (or Backward)

Start the Fast Forward (or Rewind)

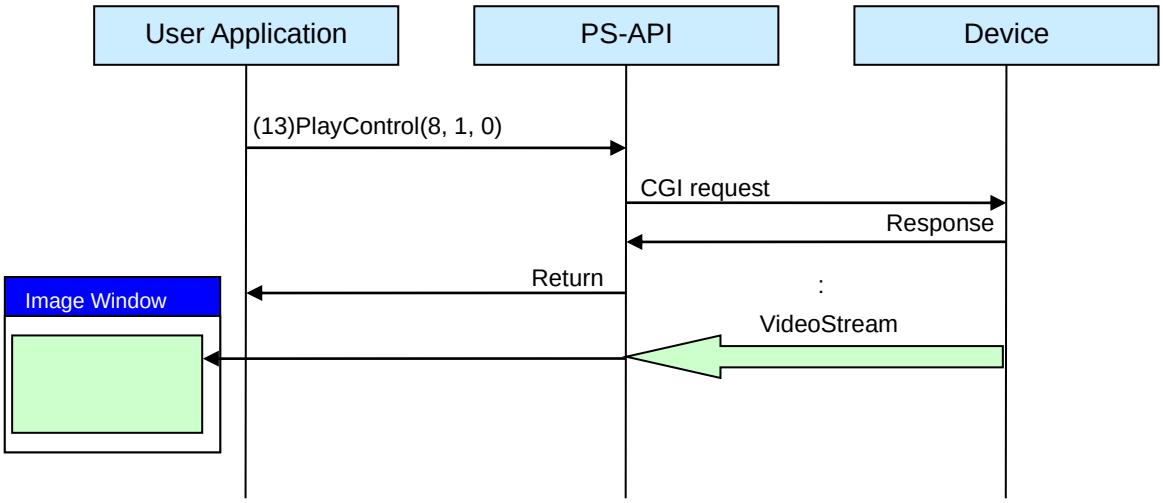

* The timing of sending CGI command is not constant, depends on the device model or the device setting.

Figure 6-7 Start the Fast Forward (or Rewind)

Display the next frame (or the previous frame)

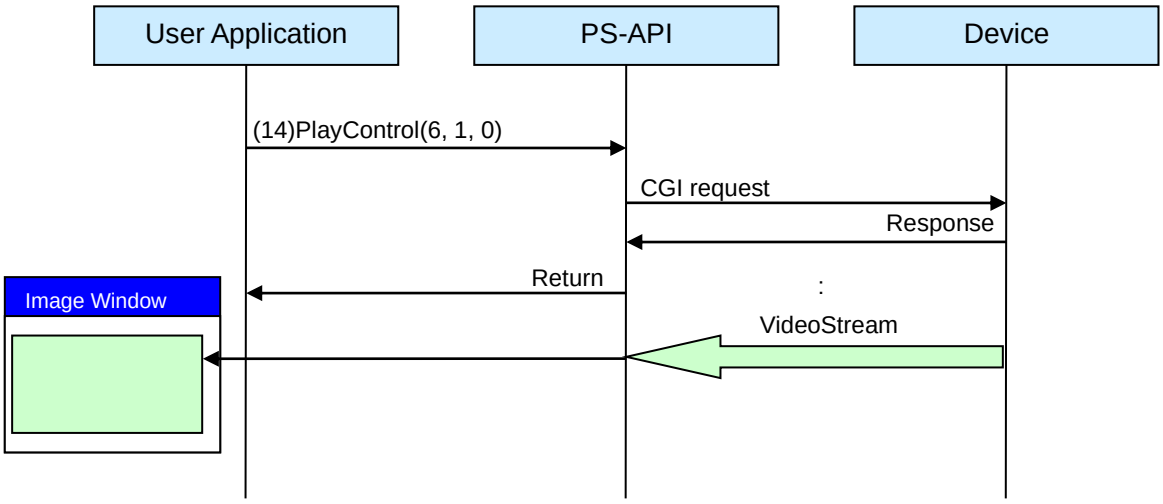

* The timing of sending CGI command is not constant, depends on the device model or the device setting.

Figure 6-8 Display the next frame (or the previous frame)

Stop Recorded Video Play

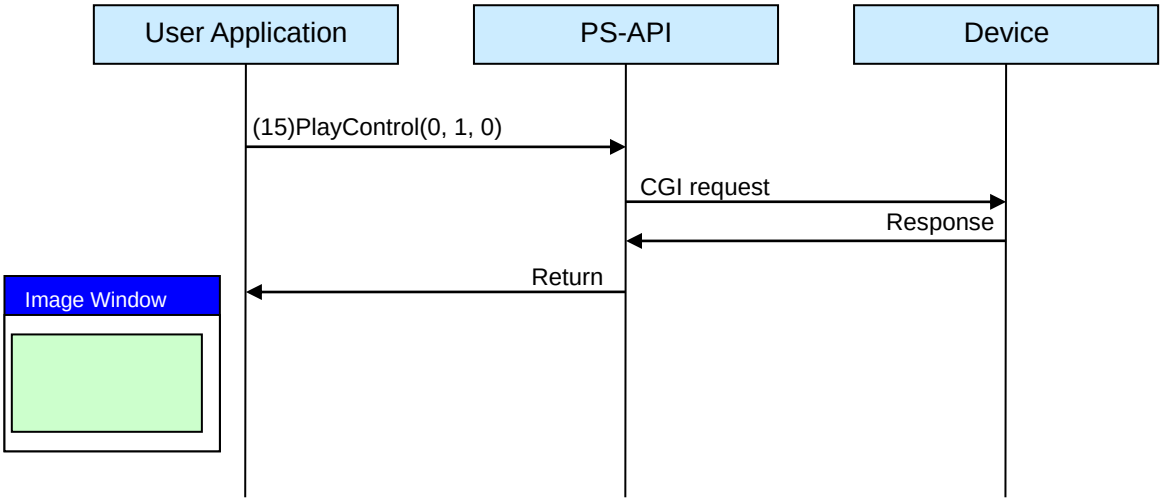

* The timing of sending CGI command is not constant, depends on the device model or the device setting.

Figure 6-9 Stop Recorded Video Play

Logout

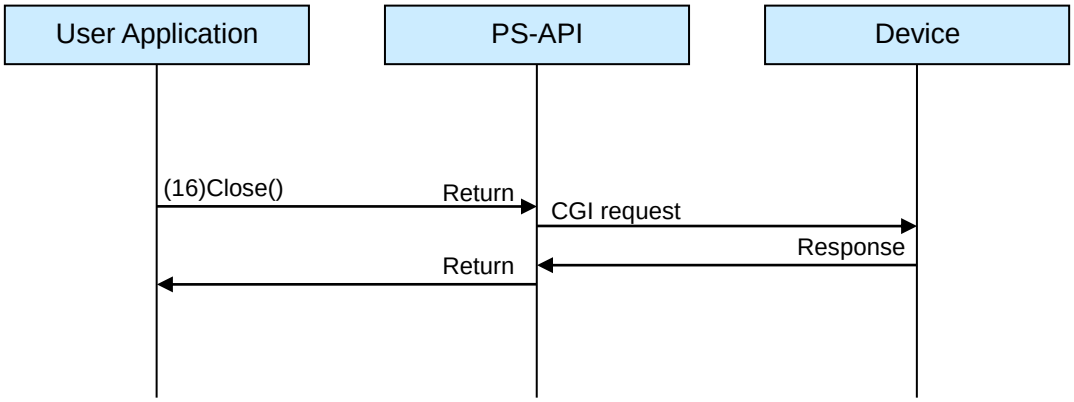

* The timing of sending CGI command is not constant, depends on the device model or the device setting.

Figure 6-10 Logout

6.3. PlayFile

6.3.1. Operation Procedure

Event setting

No.	Property / Method	Parameter	Description
1	(OnPlayStatusCBEnable)	0	Before using PlayFile method with non-blocking mode, please set OnPlayStatusCBEnable property to “1”. If OnPlayStatusCBEnable is set to “0” in case of non-blocking mode, but application cannot receive the notification of finish processing.

Start local file playback

No.	Property / Method	Parameter	Description
2	FilePassword	Password (BSTR)	Set the password to playback the video file that has password. e.g.) “”
3	PlayFile	File Name, Blocking mode (BSTR long)	Start local file playback. Specify the file name with full path. Before using PlayFile method with non-blocking mode, please set OnPlayStatusCBEnable property to “1”. If OnPlayStatusCBEnable is set to “0” in case of non-blocking mode, but application cannot receive the notification of finish processing. e.g.) "c:¥¥filesample.n3r", 0

Pause

No.	Property / Method	Parameter	Description
-	**Pause (Refer to 6.2 Play)**		

Restart local fiel playback (or Backward)

No.	Property / Method	Parameter	Description
-	**Restart local fiel playback (or Backward) (Refer to 6.2 Play)**		

Start Fast Forward (or Rewind)

No.	Property / Method	Parameter	Description
-	**Start Fast Forward (or Rewind) (Refer to 6.2 Play)**		

Display the next frame (or the previous frame)

No.	Property / Method	Parameter	Description
-	**Display the next frame (or the previous frame)** **(Refer to 6.2 Play)**		

Stop local file playback

No.	Property / Method	Parameter	Description
4	PlayControl	Command, Speed, Blocking mode (long, long, long)	When stop the local file playback, set the command to “2”. Set speed to “1”. Before using PlayControl method with non-blocking mode, please set OnPlayStatusCBEnable property to “1”. If OnPlayStatusCBEnable is set to “0” in case of non-blocking mode, but application cannot receive the notification of finish processing. e.g.) 2, 1, 0

6.3.2. Sequence

Event setting

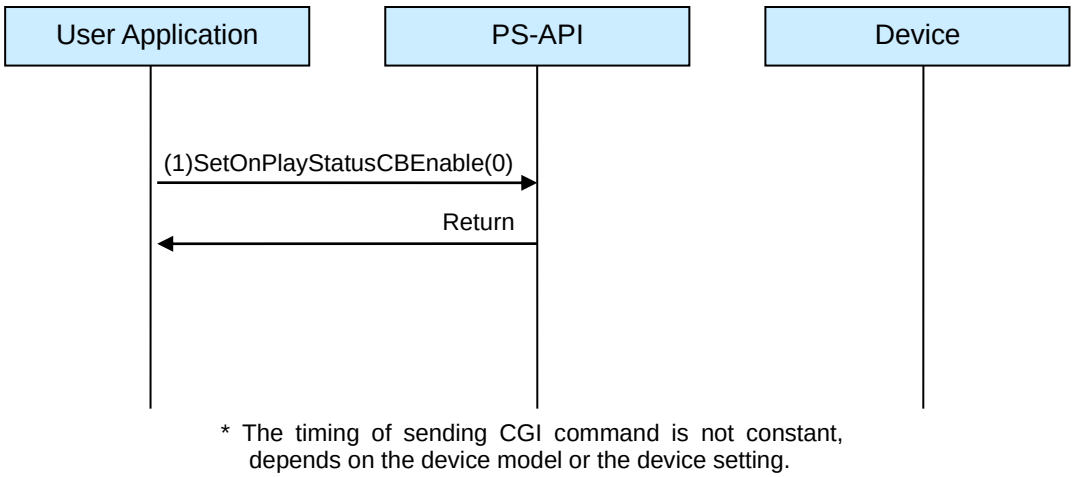

Figure 6-11 Event Setting

Start local file playback

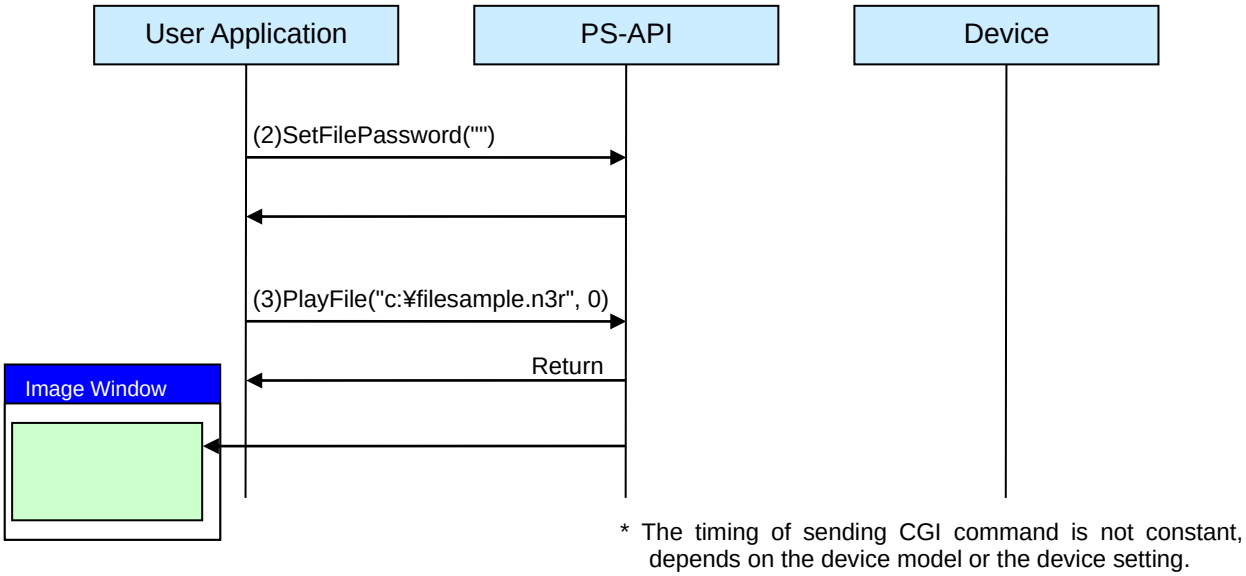

Figure 6-12 Start Local file Playback

Pause

Refer to 6.2 Play, Pause

Restart local fiel playback (or Backward)

Refer to 6.2 Play, Restart the network playback (or Backward)

Start Fast Forward (or Rewind)

Refer to 6.2 Play, Start the Fast Forward (or Rewind)

Display the next frame (or the previous frame)

Refer to 6.2 Play, Display the next frame (or the previous frame)

Stop local file playback

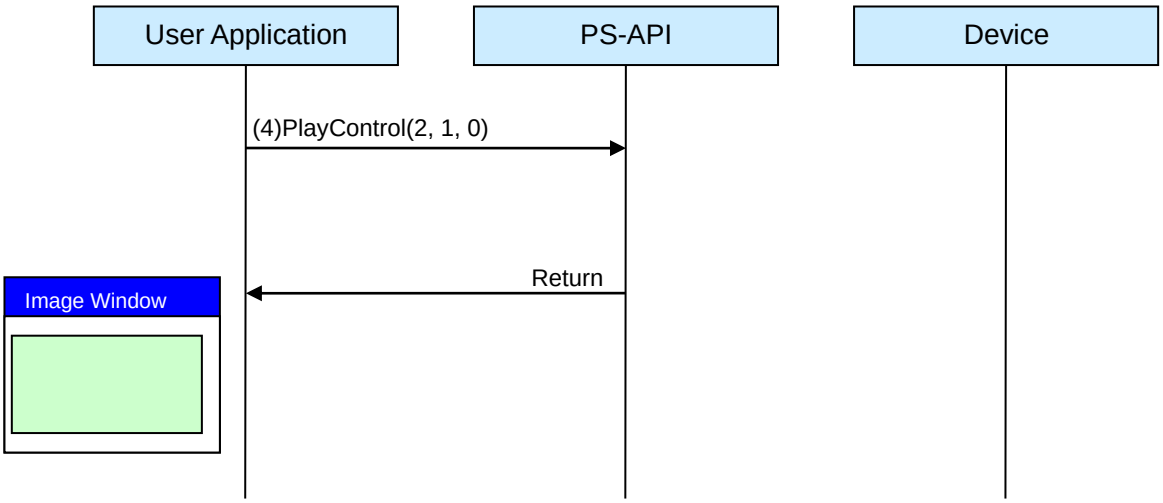

* The timing of sending CGI command is not constant, depends on the device model or the device setting.

Figure 6-13 Stop Local file Playback

6.4. CameraControl

6.4.1. Operation Procedure

Camera Control

No.	Property / Method	Parameter	Description
-	**Start Live (Refer to 6.1 PLayLive)**		
1	CameraControl	Channel, Pan speed, Tilt speed, Zoom speed, Focus speed, Iris open/close (long, long, long, long, long, long)	Start the camera control. In controlling, PS-API communicate with a target device. CameraControl method can be used in async. If CameraControl method is called during controlling the camera, the latest CameraControl command is given first priority. When getting the error of CaneraControl method, please set the listener class by using SetErrListener. e.g.) 1, 128, 128, 0, 0, 0
2	CameraControl	Channel, 0, 0, 0, 0, 0 (long, long, long, long, long, long)	Stop the camera control by setting to “0” the parameter that is needed to stop. e.g.) 1, 0, 0, 0, 0, 0
-	**Stop Live (Refer to 6.1 PlayLive)**		

6.4.2. Sequence

Camera Control

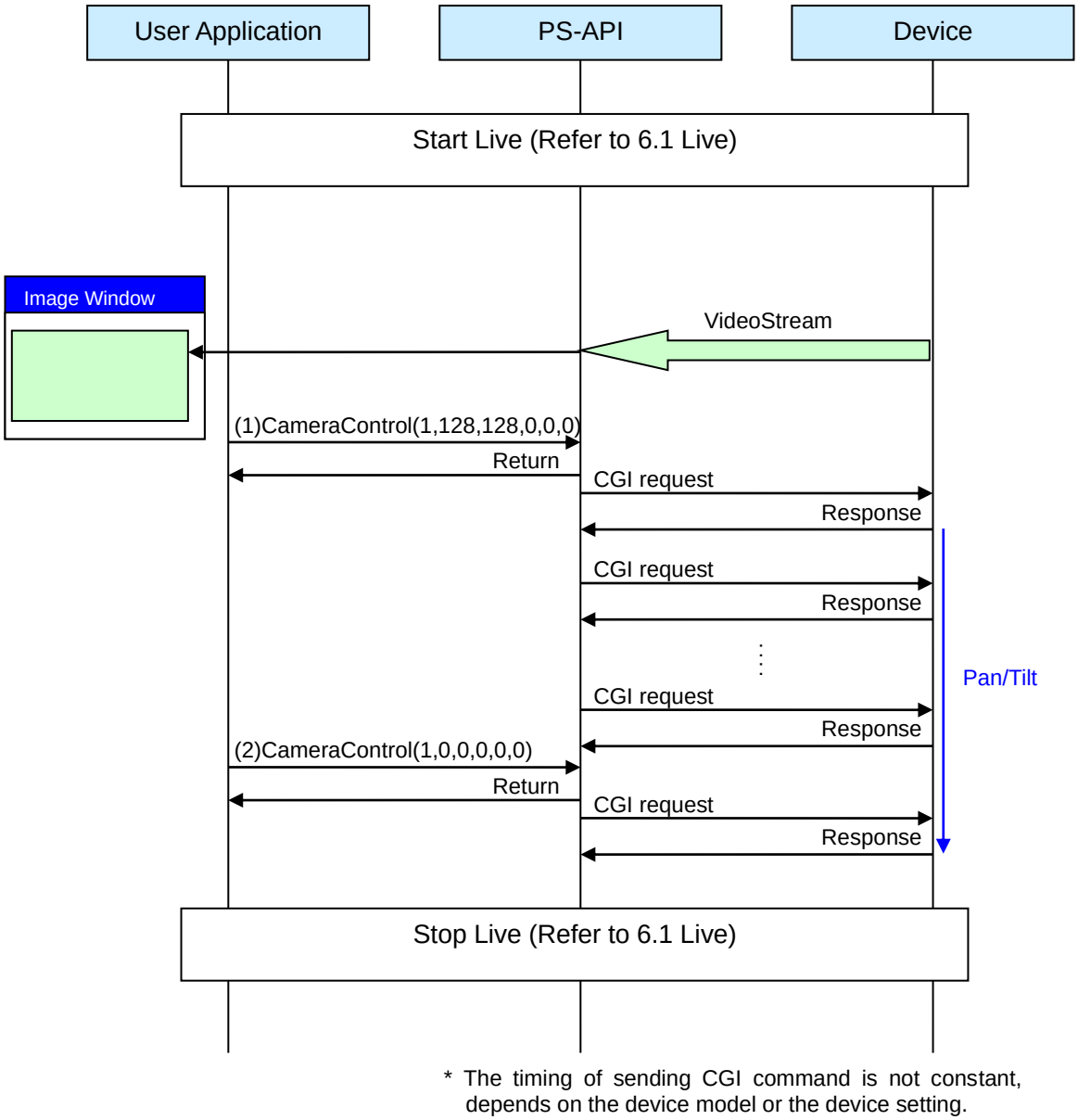

Figure 6-14 Camera Control

6.5. CameraOperation

6.5.1. Operation Procedure

Start Live

No.	Property / Method	Parameter	Description
-	**Start Live (Refer to 6.1 PlayLive)**		
1	(OnOpStatusCBEnable)	0	Before using CameraOperation method with non-blocking mode, please set OnOpStatusCBEnable property to “1”. If OnOpStatusCBEnable is set to “0” in case of non-blocking mode, but application cannot receive the notification of finish processing.

Auto Track

No.	Property / Method	Parameter	Description
2	CameraOperation	Channel, Command, Data, Blocking mode (long, long, long, long,)	Start auto track. Set command to "1". Set data to "0". Before using CameraOperation method with non-blocking mode, please set OnOpStatusCBEnable property to “1”. If OnOpStatusCBEnable is set to “0” in case of non-blocking mode, but application cannot receive the notification of finish processing. e.g.) 1, 1, 0, 0
3	CameraOperation	Channel, Command, Data, Blocking mode (long, long, long, long,)	Stop auto track. Set command to "0". Set data to "0". Before using CameraOperation method with non-blocking mode, please set OnOpStatusCBEnable property to “1”. If OnOpStatusCBEnable is set to “0” in case of non-blocking mode, but application cannot receive the notification of finish processing. e.g.) 1, 0, 0, 0

Auto Pan

No.	Property / Method	Parameter	Description
4	CameraOperation	Channel, Command, Data, Blocking mode (long, long, long, long,)lAppCallBack*)	Start auto pan . Set command to "2". Set data to "0". Before using CameraOperation method with non-blocking mode, please set OnOpStatusCBEnable property to “1”. If OnOpStatusCBEnable is set to “0” in case of non-blocking mode, but application cannot receive the notification of finish processing. e.g.) 1, 2, 0, 0
5	CameraOperation	Channel, Command, Data, Blocking mode (long, long, long, long,)	Stop auto pan. Set command to "0". Set data to "0". Before using CameraOperation method with non-blocking mode, please set OnOpStatusCBEnable property to “1”. If OnOpStatusCBEnable is set to “0” in case of non-blocking mode, but application cannot receive the notification of finish processing. e.g.) 1, 0, 0, 0

Auto Focus

No.	Property / Method	Parameter	Description
6	CameraOperation	Channel, Command, Data, Blocking mode (long, long, long, long,)	Start auto focus. Set command to "3". Set data to "0". Before using CameraOperation method with non-blocking mode, please set OnOpStatusCBEnable property to “1”. If OnOpStatusCBEnable is set to “0” in case of non-blocking mode, but application cannot receive the notification of finish processing. e.g.) 1, 3, 0, 0

Absolute position camera control

No.	Property / Method	Parameter	Description
7	GetCameraPosition	Channel	Get the absolute position value of Pan/ Tilt/ Zoom/ Focus. The absolute position value is set to CameraPosPan property, CameraPosTilt property, CameraPosZoom property, CameraPosFocus property. e.g.1) 1
8	CameraPosPan	-	The pan position value by using GetCameraPosition.
9	CameraPosTilt	-	The tilt position value by using GetCameraPosition.
10	CameraPosZoom	-	The zoom position value by using GetCameraPosition.
11	CameraPosFocus	-	The focus position value by using GetCameraPosition.
12	SetCameraPosition	Channel, Pan value, Tilt value, Zoom value, Focusvalue (long, long, long, long, long)	Specify the absolute value of Pan/ Tilt/ Zoom/ Focus. Specify the absolute value with Pan position(-475 - 3599), Tilt position (-450 - +900), Zoom position (1 - 9999), Focus position (14 - 9999). e.g.1) 1, 0, 0, 10, 14 e.g.2) 1, 360, 360, 30, 300

Stop Live

No.	Property / Method	Parameter	Description
-	**Stop Live(Refer to 6.1 PlayLive)**		

6.5.2. Sequence

Auto Track

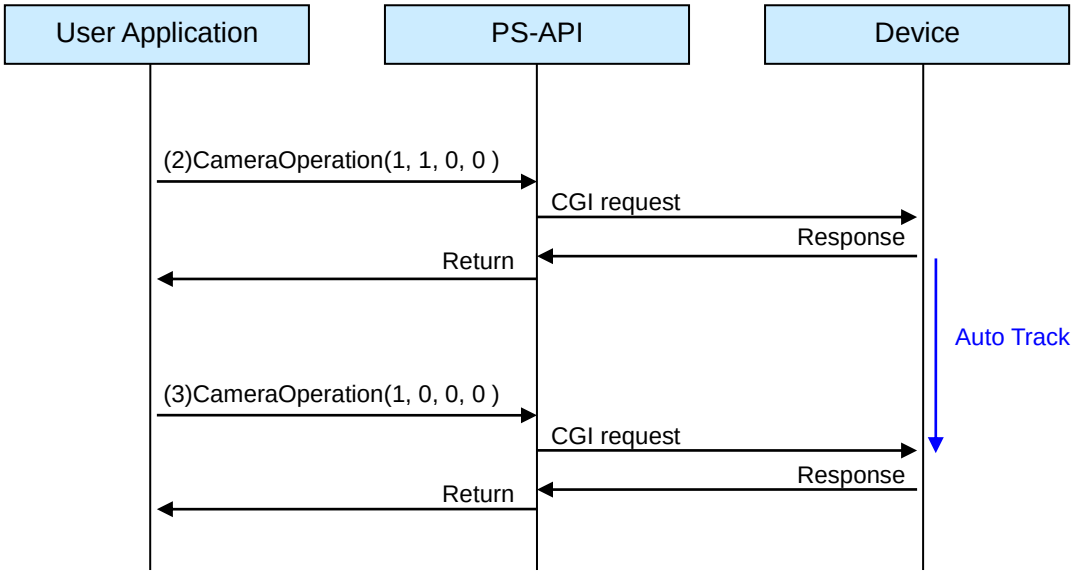

* The timing of sending CGI command is not constant, depends on the device model or the device setting.

Figure 6-15 Auto Track

Auto Pan

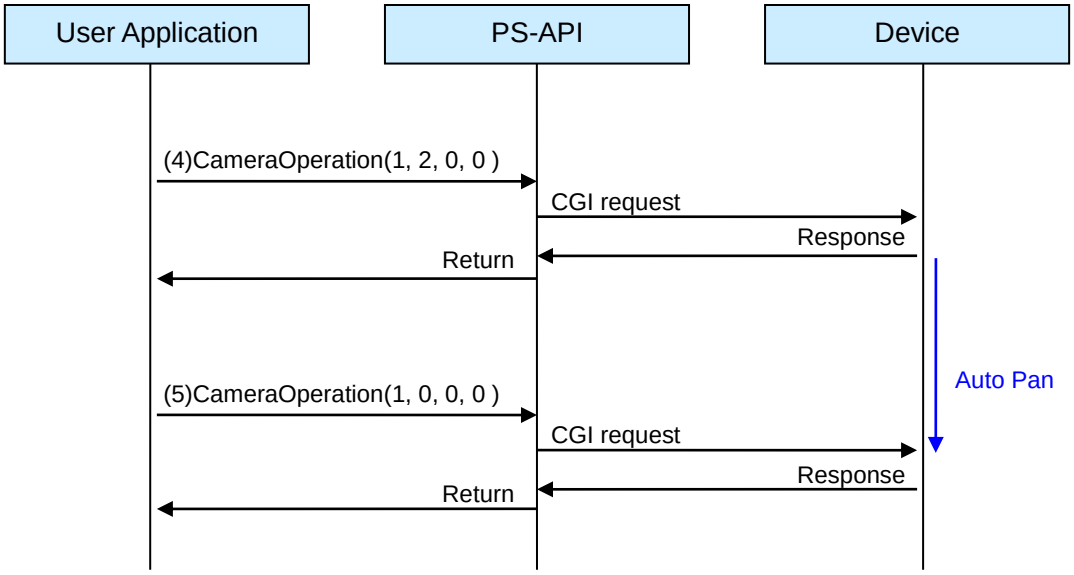

* The timing of sending CGI command is not constant, depends on the device model or the device setting.

Figure 6-16 Auto Pan

Auto Focus

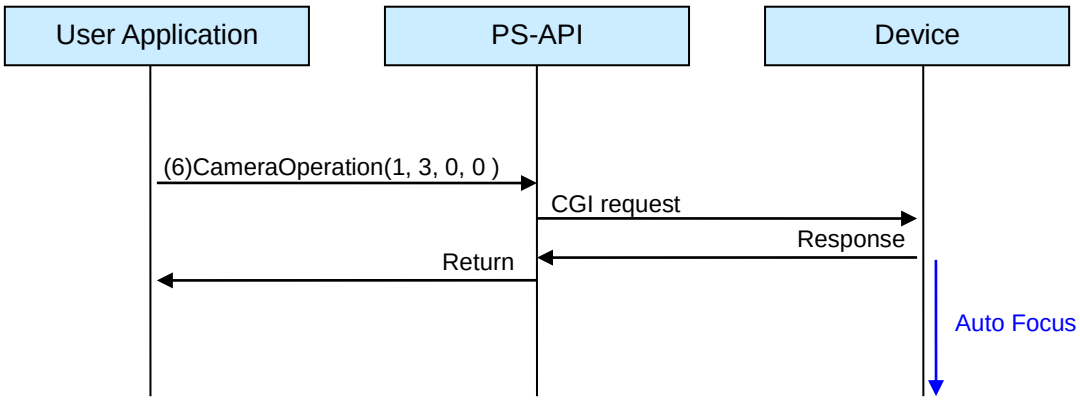

* The timing of sending CGI command is not constant, depends on the device model or the device setting.

Figure 6-17 Auto Focus

Absolute position camera control

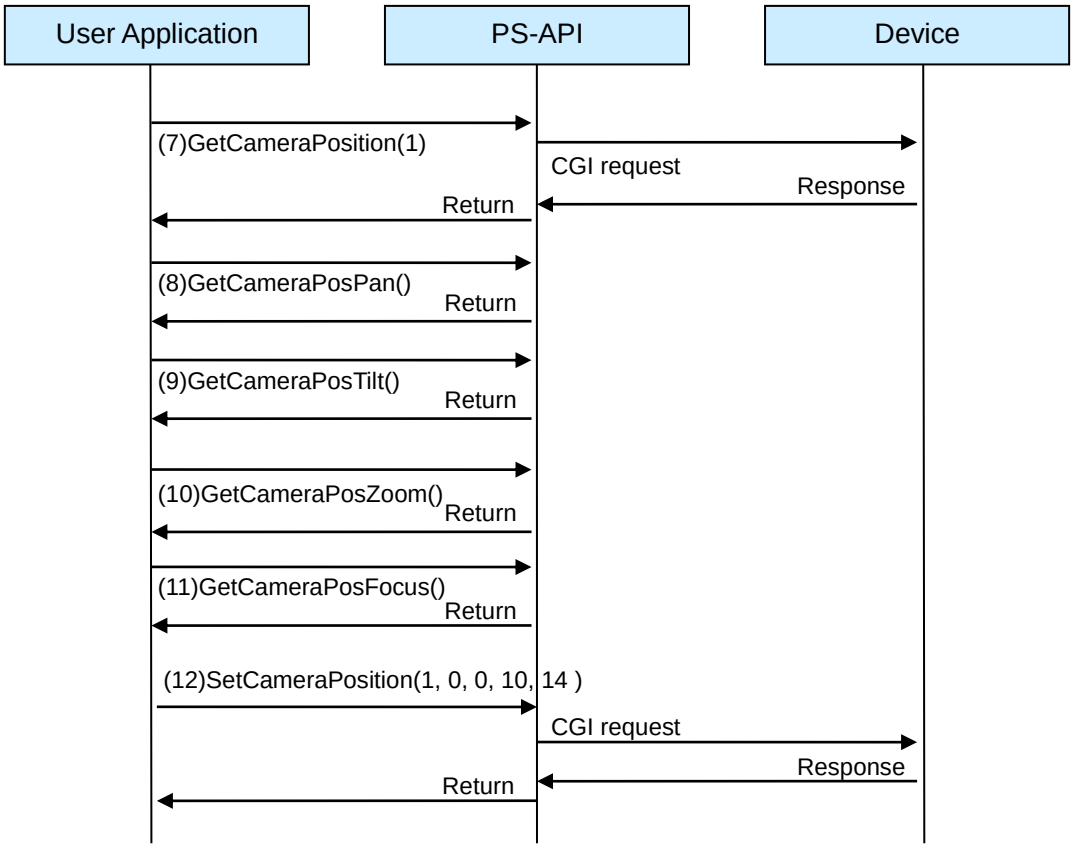

* The timing of sending CGI command is not constant, depends on the device model or the device setting.

Figure 6-18 Absolute Position Camera Control

Stop Live

6.1 PlayLive Stop Live

6.6. AlmOperation

6.6.1. Operation Procedure

Login

No.	Property / Method	Parameter	Description
-	Login **(Refer to 6.2 Play)**		
1	(OnAlmStatusCBEnable)	0	Before using AlmOperation method with non-blocking mode, please set OnAlmStatusCBEnable property to “1”. If OnAlmStatusCBEnable is set to “0” in case of non-blocking mode, but application cannot receive the notification of finish processing.

Alarm reset

No.	Property / Method	Parameter	Description
2	AlmOperation	Channel, Command, Blocking mode (long, long, long)	Reset the alarms in the target device. Alarm reset cannot be used per channel. Even if channel is specified, all alarm that is occurred in device will be reset. In case of alarm reset, set the command to “1”. Before using AlmOperation method with non-blocking mode, please set OnAlmStatusCBEnable property to “1”. If OnAlmStatusCBEnable is set to “0” in case of non-blocking mode, but application cannot receive the notification of finish processing. e.g.) 1, 1, 0

Trigger ON

No.	Property / Method	Parameter	Description
3	AlmOperation	Channel, Command, Blocking mode (long, long, long)	Trigger a device alarm by the application. Trigger operation is valid to only NWDR and NX Series. In case of trigger ON, set the command to “2”. Before using AlmOperation method with non-blocking mode, please set OnAlmStatusCBEnable property to “1”. If OnAlmStatusCBEnable is set to “0” in case of non-blocking mode, but application cannot receive the notification of finish processing. e.g.) 1, 2, 0

Logout

No.	Property / Method	Parameter	Description
-	**Logout** **(Refer to 6.2 Play)**		

6.6.2. Sequence

Alarm reset / Trigger ON

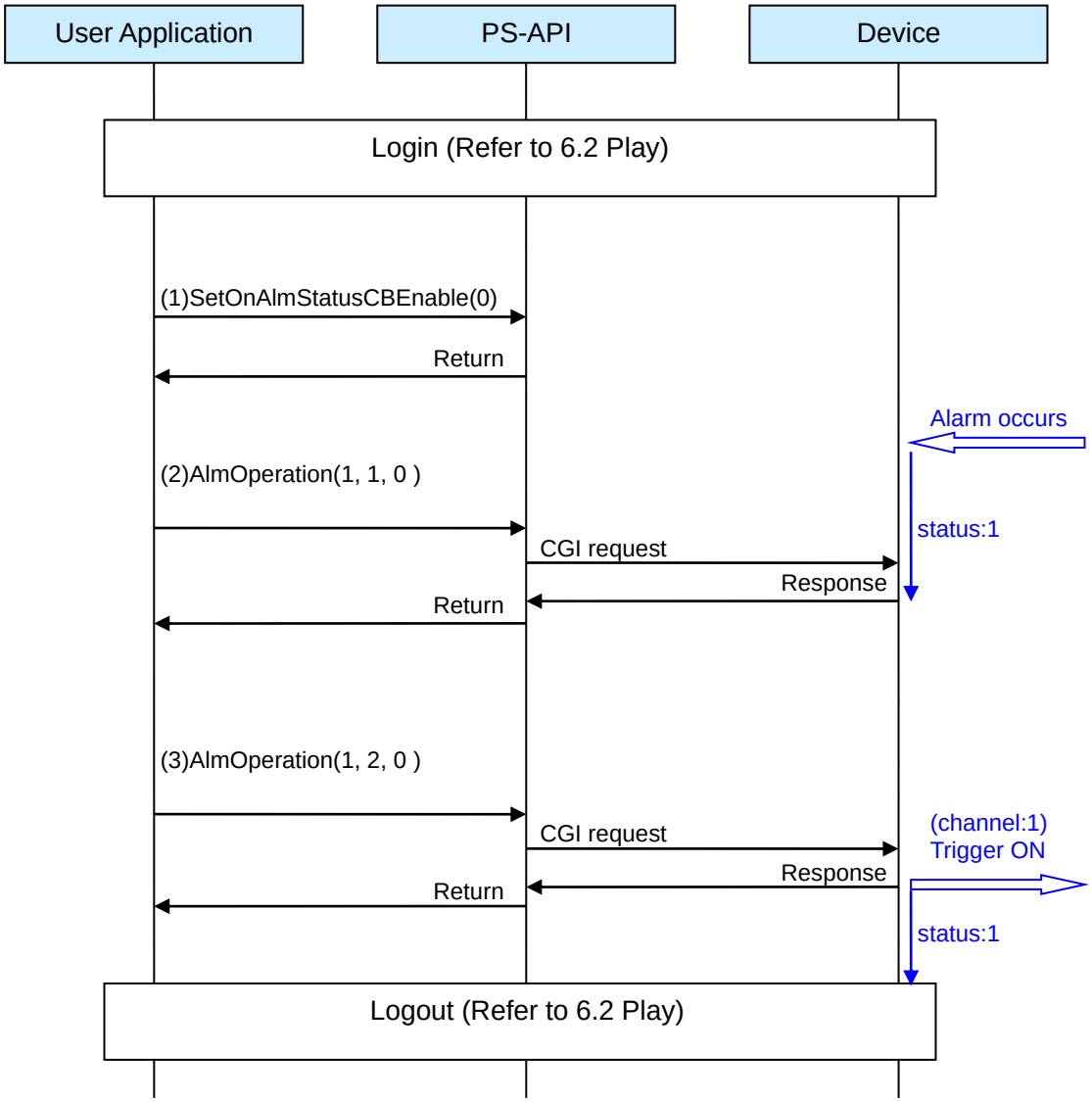

* The timing of sending CGI command is not constant, depends on the device model or the device setting.

Figure 6-19 Reset Alarm / Trigger ON

6.7. Search

6.7.1. Operation Procedure

Login

No.	Property / Method	Parameter	Description
-	**Login** **(Refer to 6.2 Play)**		

Search

No.	Property / Method	Parameter	Description
1	(OnSearchExCBEnable)	0	Before using SearchEx method with non-blocking mode, please set OnSearchExCBEnable property to “1”. If OnSearchExCBEnable is set to “0” in case of non-blocking mode, but application cannot receive the notification of finish processing.
2	SearchEx	Channel, Strat date, End date, Event kind, Blocking mode (long, BSTR, BSTR, long, long)	Start searching. Specify channel, start date, end date and event kind as search condition. The search result is set to the SearchResultEx property. Before using SearchEx method with non-blocking mode, please set OnSearchExCBEnable property to “1”. If OnSearchExCBEnable is set to “0” in case of non-blocking mode, but application cannot receive the notification of finish processing. e.g.) 1, "2008/12/01 00:00:00", "2008/12/31 23:59:59", 63, 0

Get search result

No.	Property / Method	Parameter	Description
3	SearchResultEx	-	The property that search result will be set.

Logout

No.	Property / Method	Parameter	Description
-	**Logout** **(Refer to 6.2 Play)**		

6.7.2. Sequence

Search

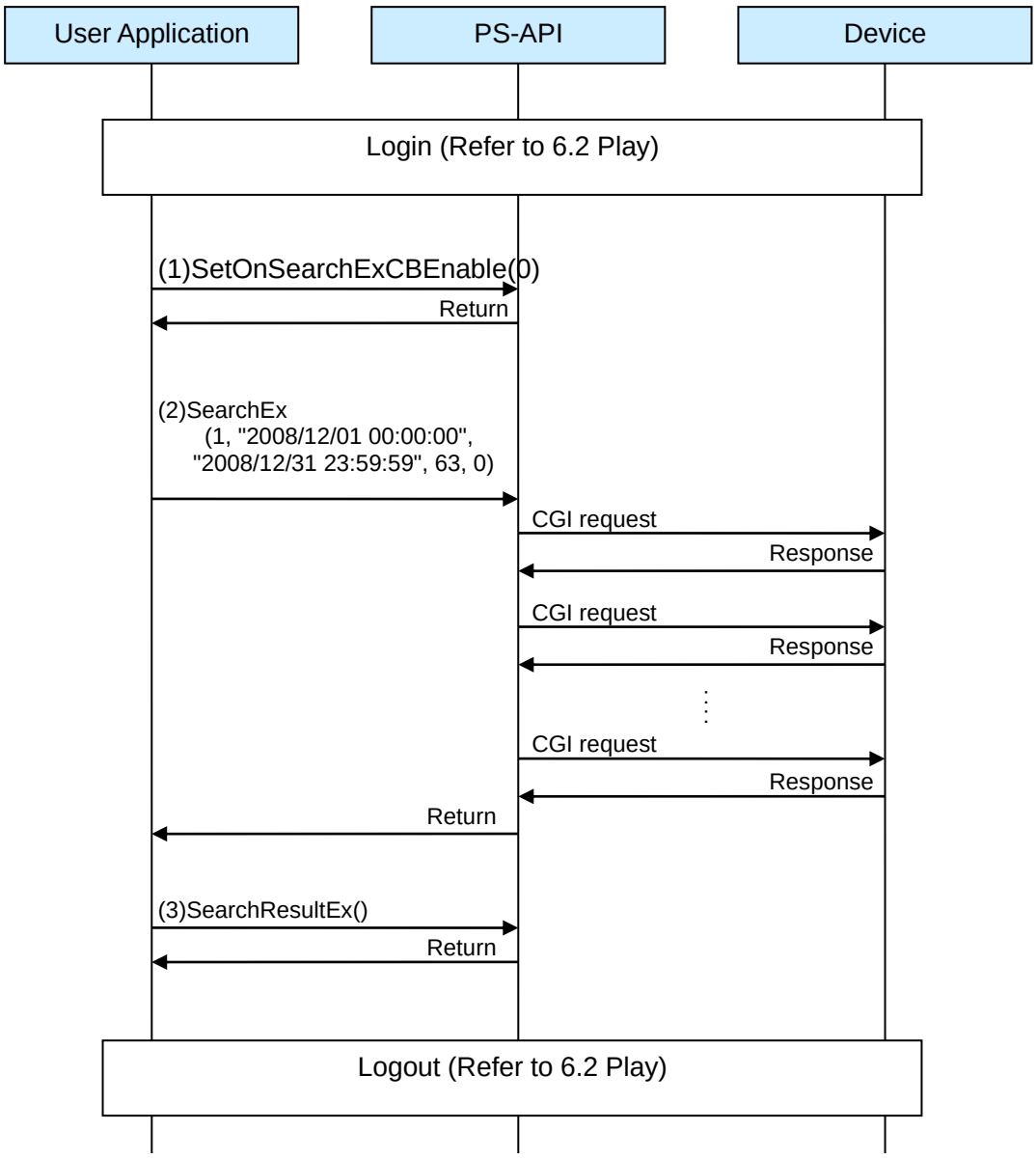

* The timing of sending CGI command is not constant, depends on the device model or the device setting.

Figure 6-20 Search

6.8. RecCtrl

6.8.1. Operation Procedure

Manual Recording

No.	Property / Method	Parameter	Description
-	**Login** **(Refer to 6.2 Play)**		
1	(OnRecCBEnable)	-	Before using RecCtrl method with non-blocking mode, please set OnRecCBEnable property to “1”. If OnRecCBEnable is set to “0” in case of non-blocking mode, but application cannot receive the notification of finish processing.
2	RecCtrl	Channel, Command, Blocking mode (long, long, long,)	Start manual recording. When starting manual recording for all channel, set the channel to “0”. If specifying a channel for HD300, ND200, ND300 and HD600/700, all channels recording will be started. In case of recording start, set the command to “1”. Before using RecCtrl method with non-blocking mode, please set OnRecCBEnable property to “1”. If OnRecCBEnable is set to “0” in case of non-blocking mode, but application cannot receive the notification of finish processing. e.g.) 2, 1, 0
3	RecCtrl	Channel, Command, Blocking mode (long, long, long,)	Stop manual recording. In case of recording stop, set the command to “0”. e.g.) 2, 0, 0
-	**Logout** **(Refer to 6.2 Play)**		

6.8.2. Sequence

Manual Recording

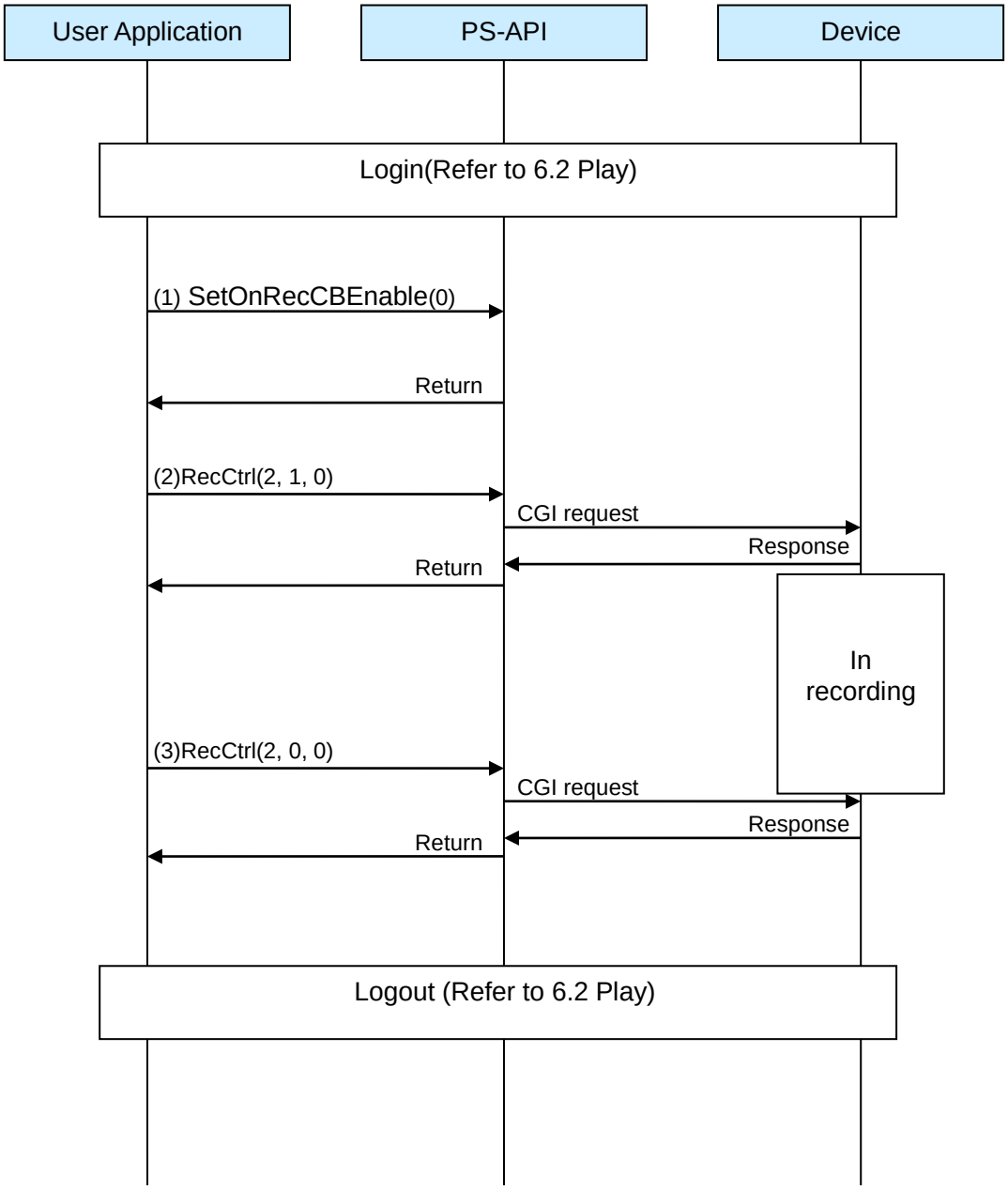

* The timing of sending CGI command is not constant, depends on the device model or the device setting.

Figure 6-21 Manual Recording

6.9. MultiPlayLive

6.9.1. Operation Procedure

Start Live

No.	Property / Method	Parameter	Description	Sample Code
1	IPAddr	Refer to 6.1 PlayLive	Refer to 6.1 PlayLive	m_psapi1. IPAddr("192.168.0.250"); m_psapi2. IPAddr("192.168.0.250");
2	DeviceType	Refer to 6.1 PlayLive	Refer to 6.1 PlayLive	m_psapi1.DeviceType(1); m_psapi2.DeviceType(1);
3	HttpPort	Refer to 6.1 PlayLive	Refer to 6.1 PlayLive	m_psapi1.HttpPort(80); m_psapi2.HttpPort(80);
4	UserName	Refer to 6.1 PlayLive	Refer to 6.1 PlayLive	m_psapi1.UserName("ADMIN"); m_psapi2.UserName("ADMIN");
5	Password	Refer to 6.1 PlayLive	Refer to 6.1 PlayLive	m_psapi1.Password("12345"); m_psapi2.Password("12345");
6	StreamFormat	Refer to 6.1 PlayLive	Refer to 6.1 PlayLive	m_psapi1.StreamFormat(0); m_psapi2.StreamFormat(0);
7	JPEGResolution/ MPEG4Resolution/ H264Resolution	Refer to 6.1 PlayLive	Refer to 6.1 PlayLive	m_psapi1.JPEGResolution(640); m_psapi2.JPEGResolution(640);
8	Open/Connect	Refer to 6.1 PlayLive	Refer to 6.1 PlayLive	long lUid = m_psapi1.Open(); m_psapi2.Connect(lUid);
9	(OnPlayStatus CBEnable)	Refer to 6.1 PlayLive	Refer to 6.1 PlayLive	m__psapi1.OnPlayStatusCBEnable(0); m__psapi2.OnPlayStatusCBEnable(0);

10	PlayLive	Refer to 6.1 PlayLive	Refer to 6.1 PlayLive	//channel : 1
				m_psapi1->PlayLive(1, 0);
				//channel : 2
				m_psapi2->PlayLive(2, 0);

Stop Live

No.	Property / Method	Parameter	Description	

11	PlayControl	Refer to 6.1 PlayLive	Refer to 6.1 PlayLive	//Stop Live
				m_psapi1.PlayControl(1, 1, 0);
				m_psapi2.PlayControl(1, 1, 0);

12	Close/Disconnect	Refer to 6.1 PlayLive	Refer to 6.1 PlayLive	// m_psapi2, Disconnect is called first.
				m_psapi2.Disconnect();
				m_psapi1.Close();

6.9.2. Sequence

Start Live

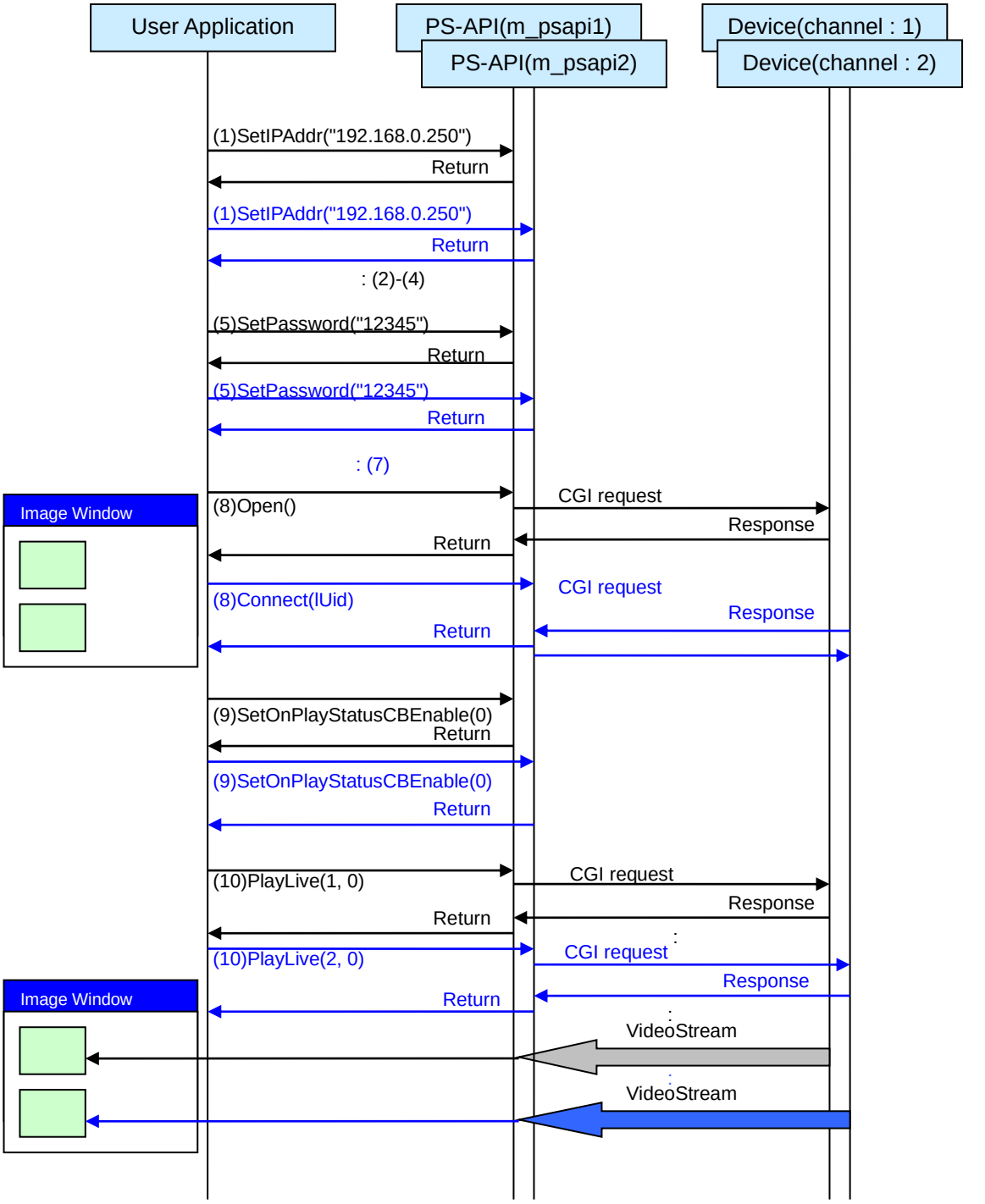

* The timing of sending CGI command is not constant, depends on the device model or the device setting.

Figure 6-22 Start Live

Stop Live

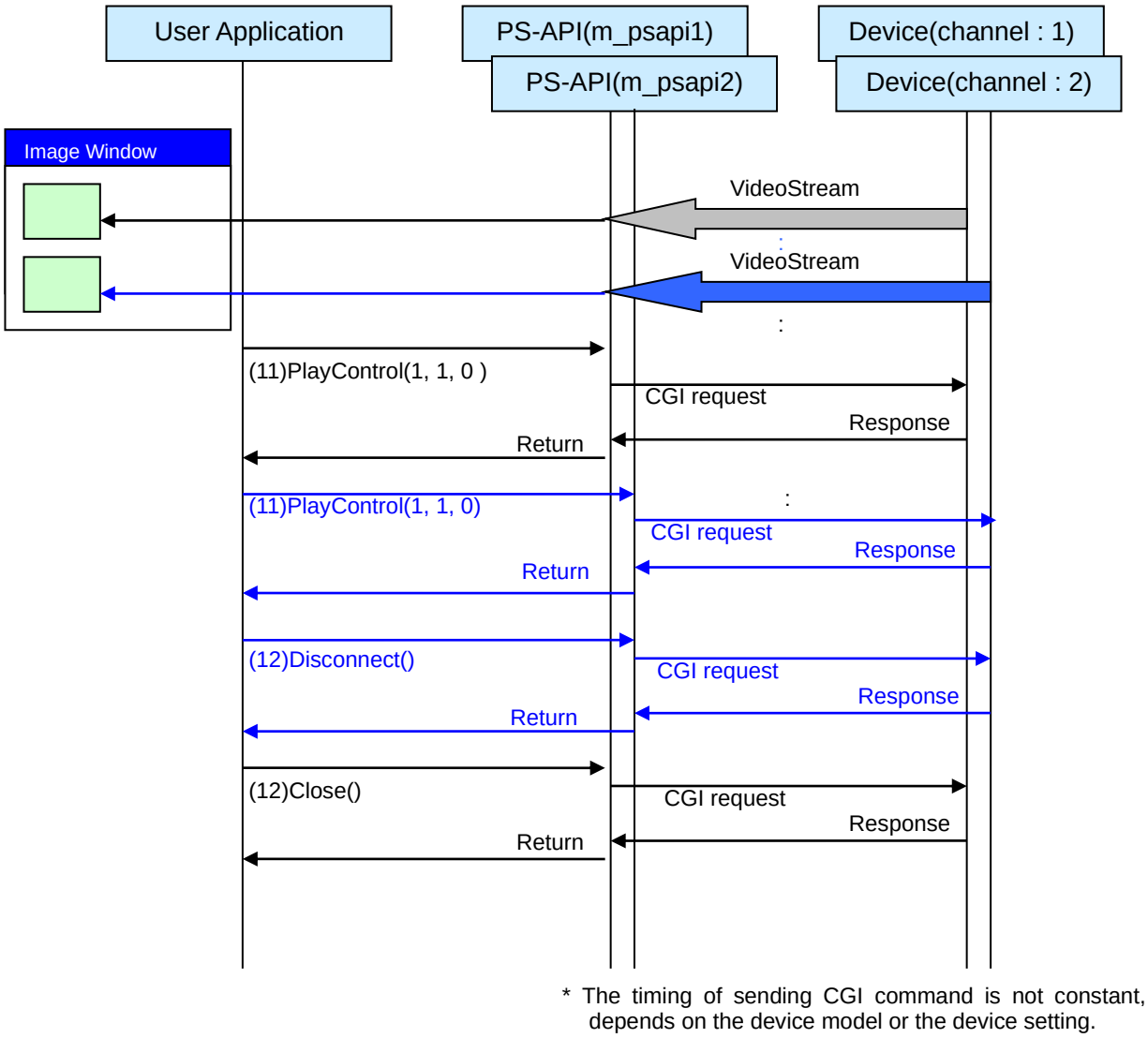

* The timing of sending CGI command is not constant, depends on the device model or the device setting.

Figure 6-23 Stop Live

6.10. FtpGet

6.10.1. Operation Procedure

FTP download

No.	Property / Method	Parameter	Description
1	IPAddr	IP Address (char*)	Set IP Address into PS-API. e.g.) “192.168.0.10“
2	DeviceType	Device type (long)	Set the device type corresponding to a target device. e.g.) 2
3	HttpPort	Port number (long)	Set Http port number into PS-API. e.g.) 80
4	UserName	Character strings (char*)	Set user name into PS-APi. e.g.) admin
5	Password	Character strings (char*)	Set password into PS-API. e.g.) 12345
6	FtpPort	Port number (long)	Ftp server port. e.g.) 21
7	FtpTransMode	Mode (long)	Ftp transmission mode e.g.) 0
8	Open/Connect	UID (long)	Connect to a target device. When getting a new UID, please use Open method.

No.	Property / Method	Parameter	Description
9	FtpGet	Channel, Start time&date, End time&date, Data type Event type, File Name Blocking mode, (long, BSTR BSTR, long, long, BSTR, long)	Start FTP downloading. Specify channel, start date, end date, data type, evevnt type and file name as download condition. Before using FtpGet method with non-blocking mode, please set OnFtpStatusCBEnable property to “1”. If OnFtpStatusCBEnable is set to “0” in case of non-blocking mode, but application cannot receive the notification of finish processing. e.g.) 1, "2008/12/01 12:00:00", "2008/12/01 12:10:00", 0, 63, "C:¥DownloadFolder¥Downloadfile", 0
10	FtpServerClose	-	Turn off the FTP server mode of a target device. If the PS-API instance doesn’t log in yet, the PS-API instance logs in during changing the FTP server mode.
11	Close/Disconnect	-	Stop the communication with the target device. When using Close method, UID will be annulled.

6.10.2. Sequence

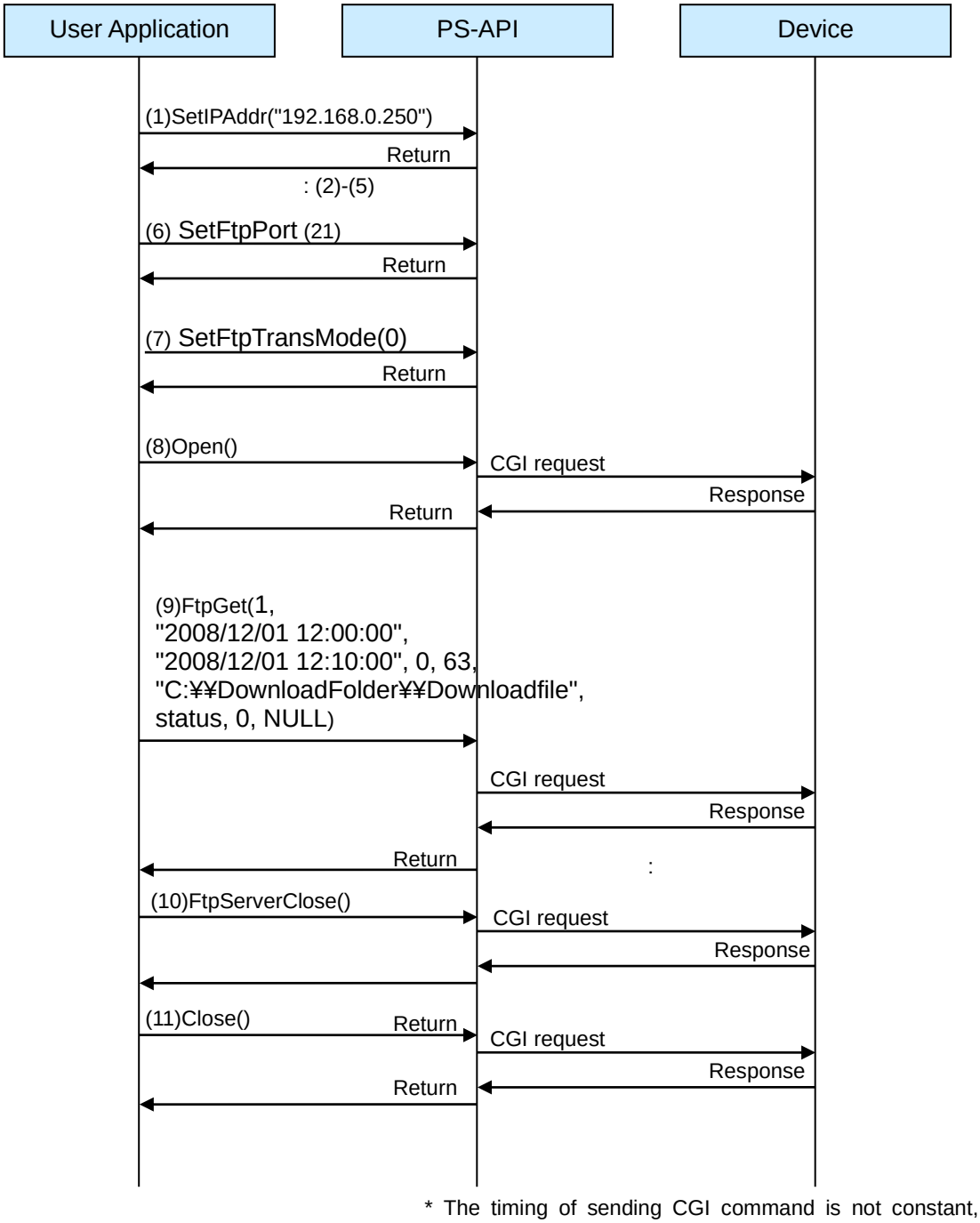

* The timing of sending CGI command is not constant,

Figure 6-24 FTP download

6.11. Audio

6.11.1. Operation Procedure

Start Live with audio reception

No.	Property / Method	Parameter	Description
1	IPAddr	IP Address (BSTR)	Set IP Address into PS-API. e.g.) “192.168.0.10”
2	DeviceType	Device type (long)	Set the device type corresponding to a target device. e.g.) 2
3	HttpPort	Port number (long)	Set Http port number into PS-API. e.g.) 80
4	UserName	Character strings (BSTR)	Set user name into PS-APi. e.g.) admin
5	Password	Character strings (BSTR)	Set password into PS-API. e.g.) 12345
6	StreamFormat	Stream type (long)	Set the stream type into PS-API. In case of NWDR, set the stream type that is same with a target channel that is wanted to display. e.g.) 0

No.	Property / Method	Parameter	Description
7	JPEGResolution/ MPEG4Resolution/ H264Resolution	Resolution (long)	It is necessary that the resolution setting is same value of the device setting. e.g.) 640
8	Open/Connect	UID (long)	Connect to a target device. When getting a new UID, please use Open method.
9	AudioRcvEnable	Reception mode (long)	Set a mode whether receiving audio stream with PlayLive or Play into PS-API. e.g.) 1
10	AudioRcvVolume	Volume (long)	Set a volume of the audio reception into PS-API. e.g.) 10
11	PlayLive	Channel, Blocking mode, (long, long)	Start displaying live image. In case of network camera, please set the channel to “1”. In case of NWDR, NX Series, HD600/700 or HD300, please set the channel to number that is wanted to display. Before using PlayLive method with non-blocking mode, please set OnPlayStatusCBEnable property to “1”. If OnPlayStatusCBEnable is set to “0” in case of non-blocking mode, but application cannot receive the notification of finish processing. e.g.) 1, 0

Change volume for audio reception

No.	Property / Method	Parameter	Description
12	AudioRcvVolume	Volume (long)	Change a volume of the audio reception into PS-API. e.g.) 50

Mute setting for audio reception

No.	Property / Method	Parameter	Description
13	AudioRcvMute	Mute (long)	Set a mute mode of the audio reception into PS-API. e.g.) 1

Start audio transmission

No.	Property / Method	Parameter	Description
14	AudioSendVolume	Volume (long)	Set a volume of the audio transmission into PS-API. e.g.) 10
15	AudioSendMute	Mute (long)	Set a mute mode setting of the audio transmission into PS-API. e.g.) 0
16	AudioSend	command (long)	Start or Stop the audio transmission. When starting audio transmission, command is set to “1”. e.g. 1

Stop audio transmission

No.	Property / Method	Parameter	Description
17	AudioSend	command (long)	Start or Stop the audio transmission. When stops audio transmission, command is set to “0”. e.g. 0

Stop Live

No.	Property / Method	Parameter	Description
18	PlayControl	Command, Speed, Blocking mode, (long, long, long)	To stop live, set command to “1”. Set speed to “1”. Before using PlayLive method with non-blocking mode, please set OnPlayStatusCBEnable property to “1”. If OnPlayStatusCBEnable is set to “0” in case of non-blocking mode, but application cannot receive the notification of finish processing. e.g.) 1, 1, 0
19	AudioRcvEnable	Reception mode (long)	Set a mode whether receiving audio stream with PlayLive or Play into PS-API. e.g.) 0
20	Close/Disconnect	-	Stop the communication with the target device. When using Close method, UID will be annulled.

6.11.2. Sequence

Start Live with audio reception

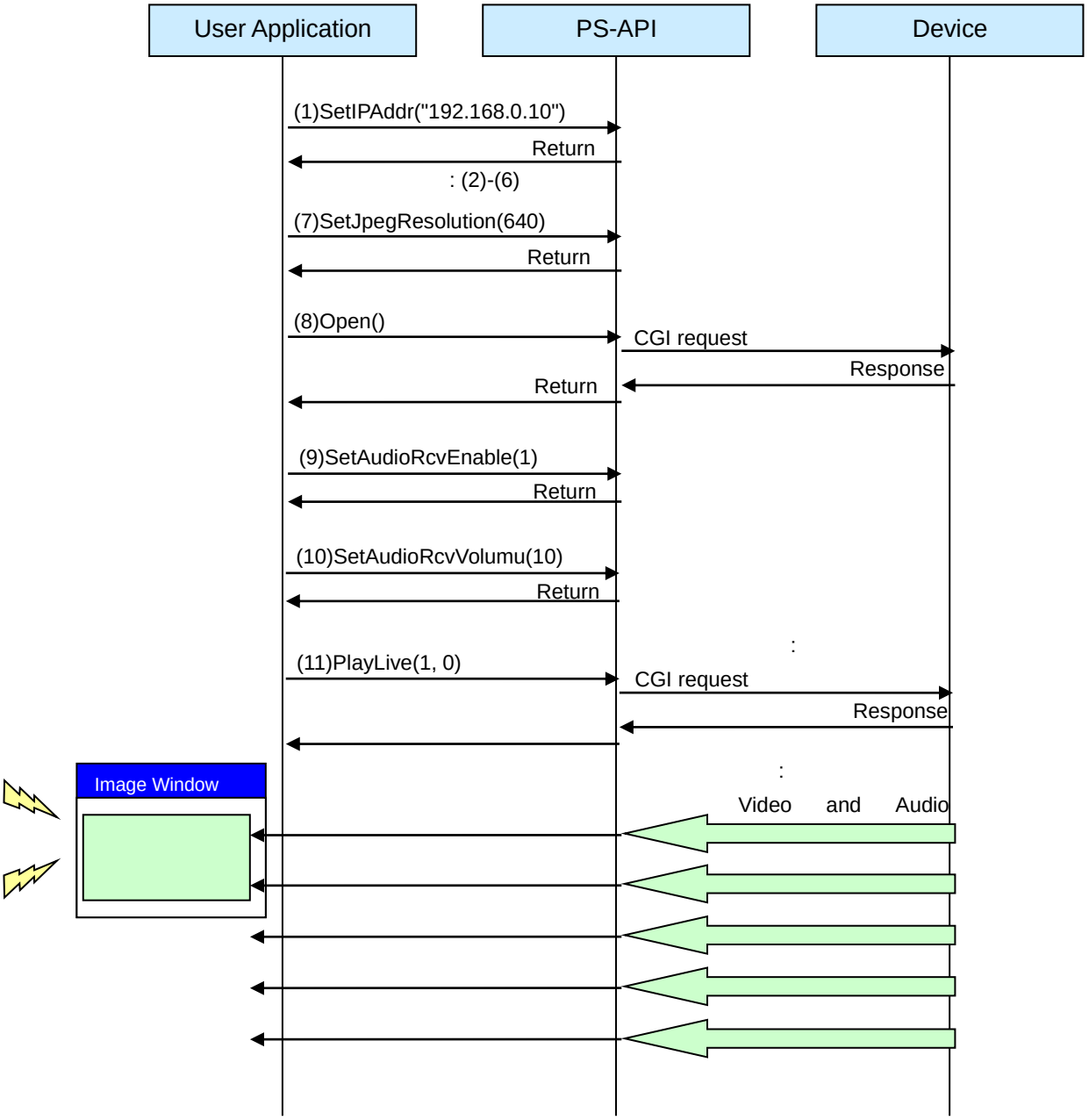

* The timing of sending CGI command is not constant,

Figure 6-25 Start Live with Audio

Change volume for audio reception

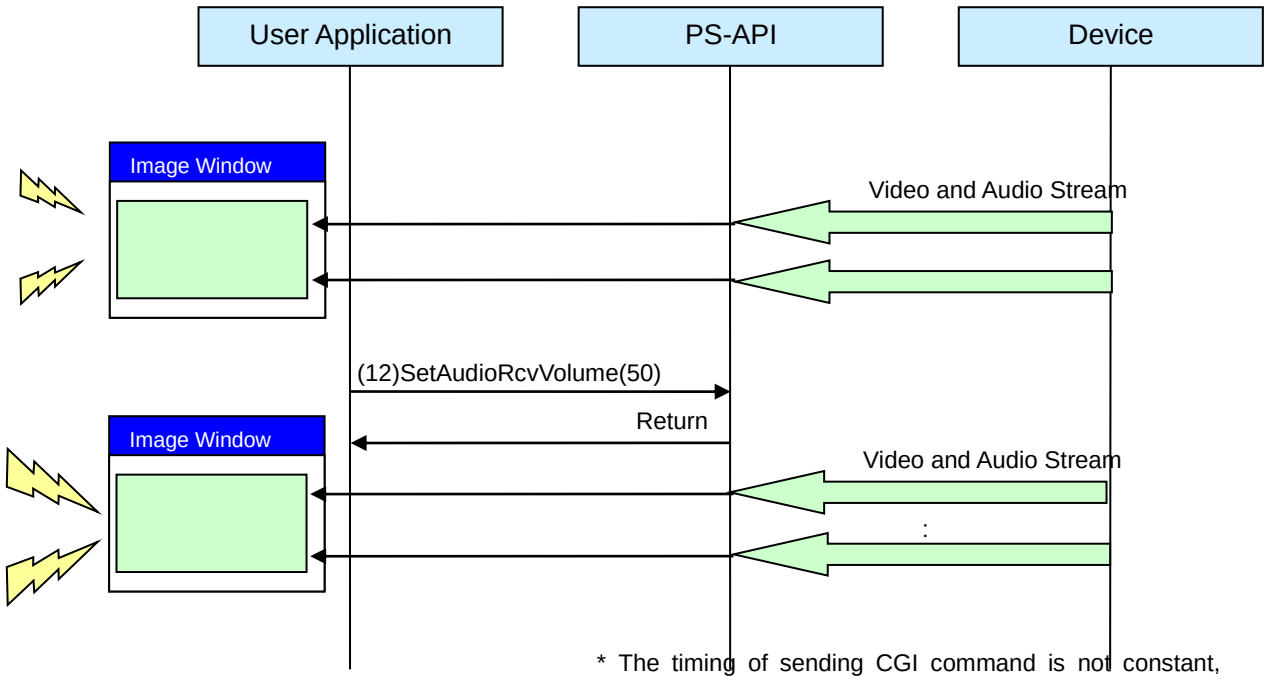

Figure 6-26 Change a volume

Mute setting for audio reception

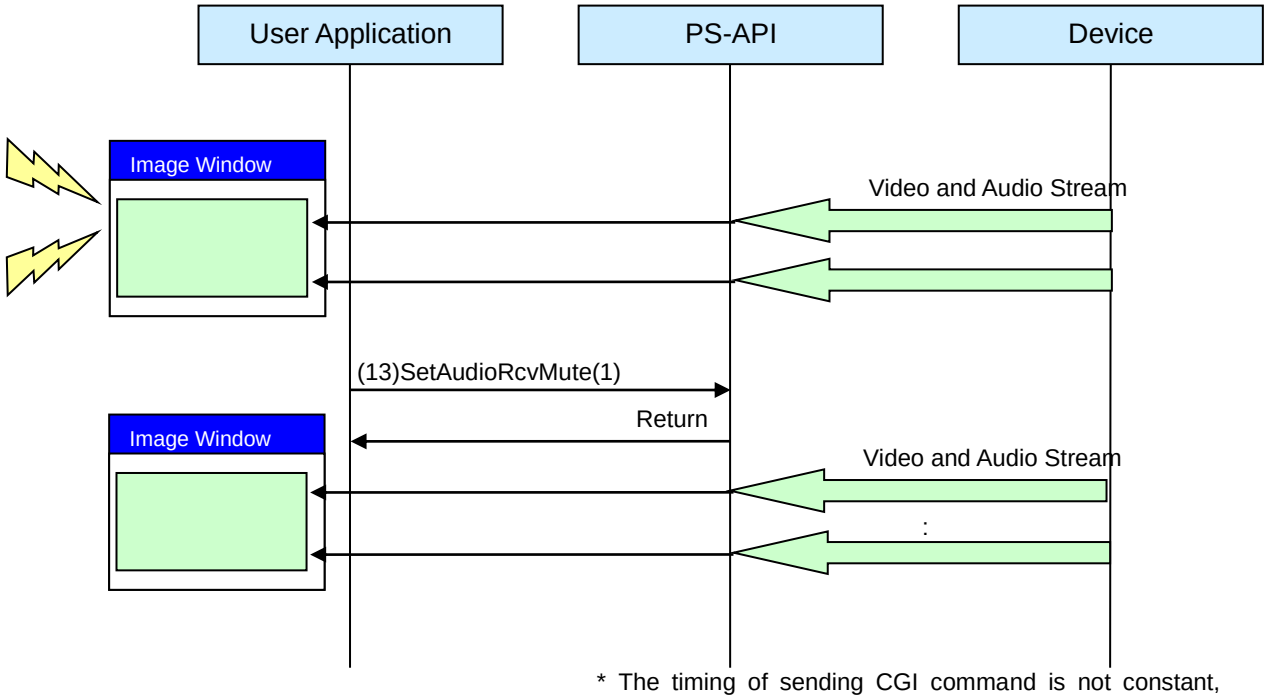

Figure 6-27 Mute

Start and stop audio transmission

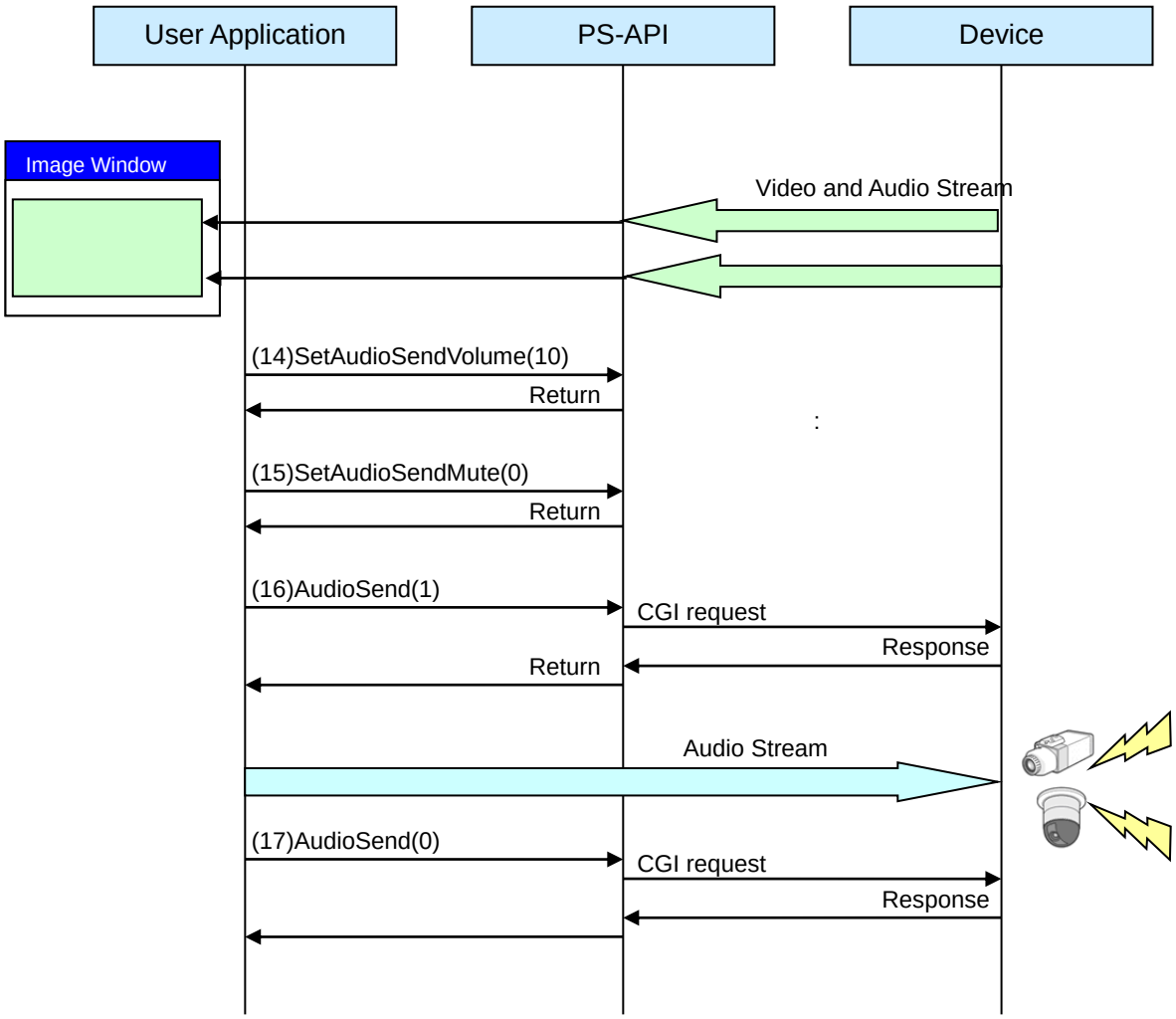

* The timing of sending CGI command is not constant,

Figure 6-28 Audio Transmission

Stop Live

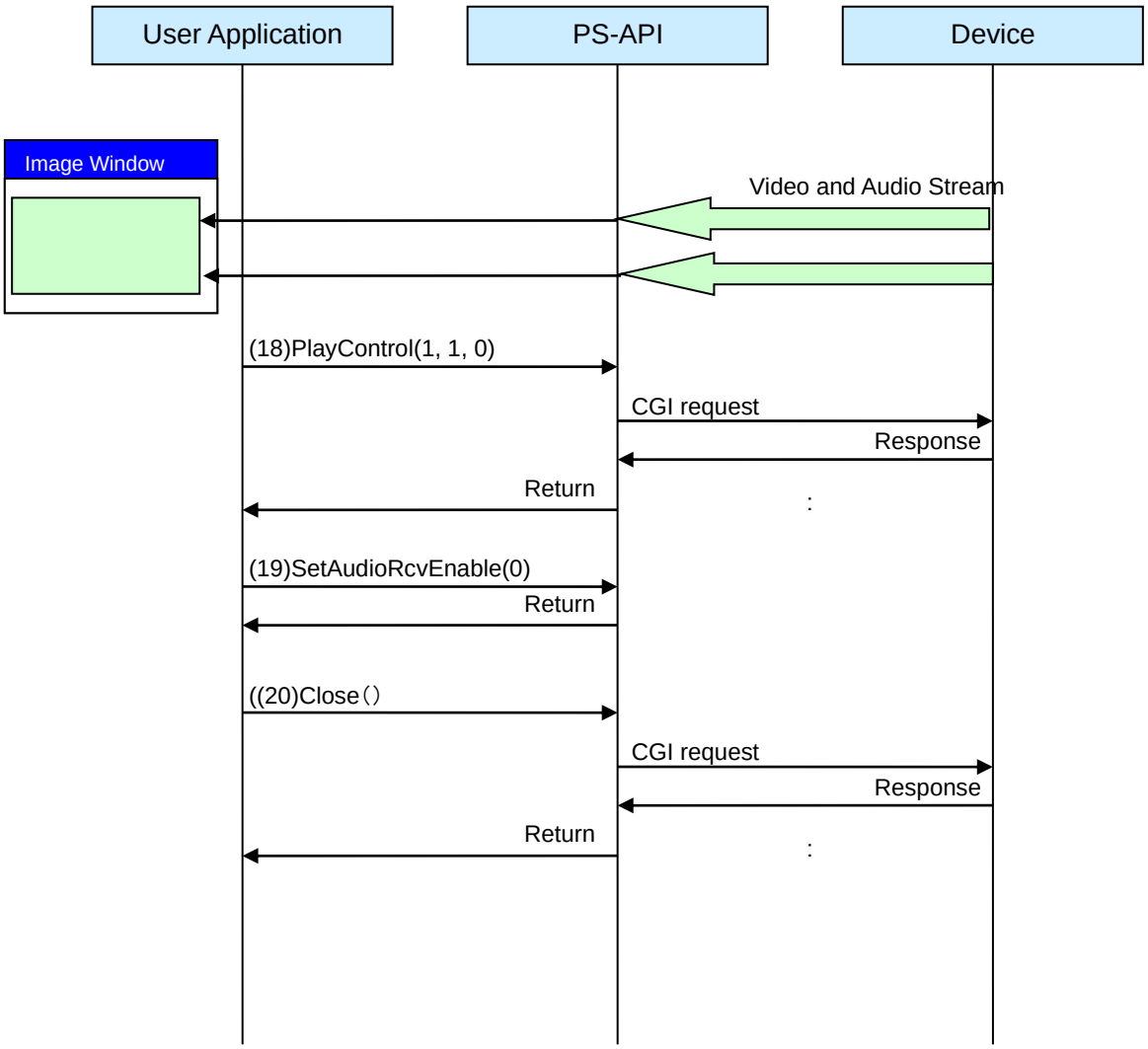

* The timing of sending CGI command is not constant,

Figure 6-29 Stop Live

6.12. SnapShot

6.12.1. Operation Procedure

Save Snapshot iamge

No.	Property / Method	Parameter	Description
-	**Start Live (Refer to 6.1 PLayLive)**		
2	SaveJpegImage	File name (BSTR)	Store the displayed image in a jpeg format file. Specify the completed file path. "C:¥¥JpegSnapShot.jpg"
-	**Stop Live (Refer to 6.1 PlayLive)**		

Digital zoom

No.	Property / Method	Parameter	Description
-	**Start Live (Refer to 6.1 PLayLive)**		
3	DigitalZoom	Magnification (long)	Do digital zoom of the displayed image by specifying magnification. e.g.) 40
2	DigitalZoomMove	xPosition, yPosition (long, long)	Move the displayed area during working a digital zoom. Specify distance of x direction and distance of y direction. e.g.) 320,0
-	**Stop Live (Refer to 6.1 PlayLive)**		

6.12.2. Sequence

Save Snapshot iamge

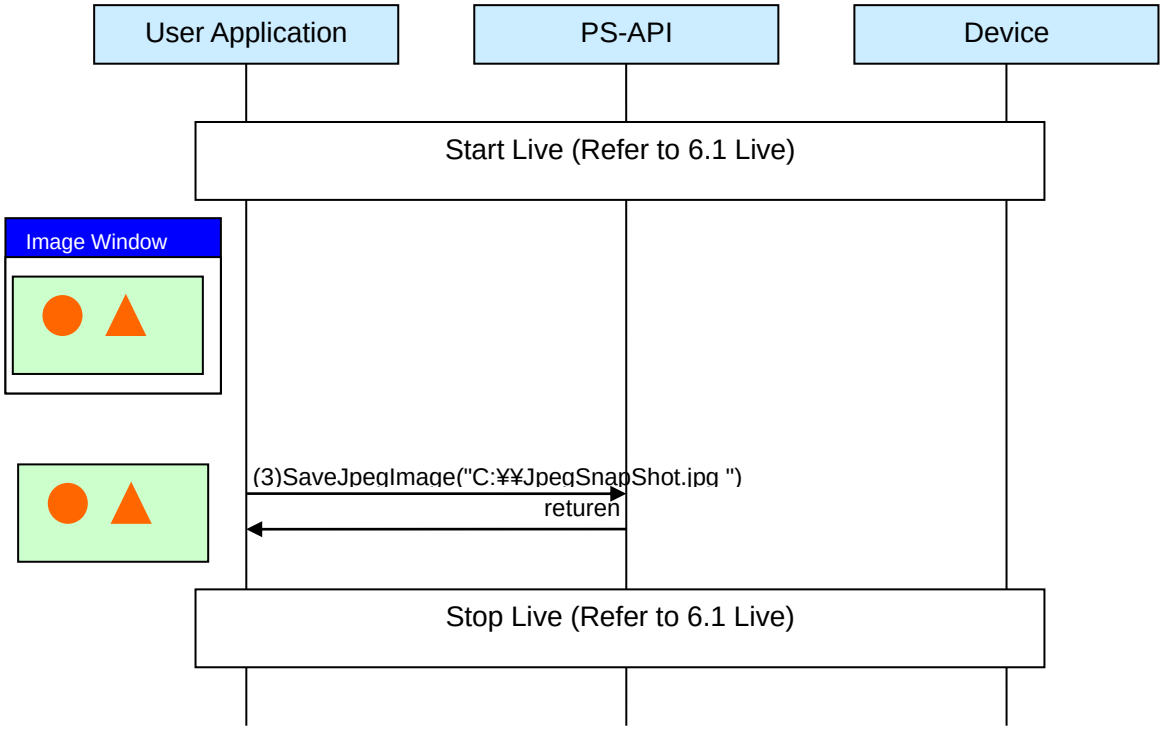

* The timing of sending CGI command is not constant, depends on the device model or the device setting.

Figure 6-30 SnapShot

Digital zoom

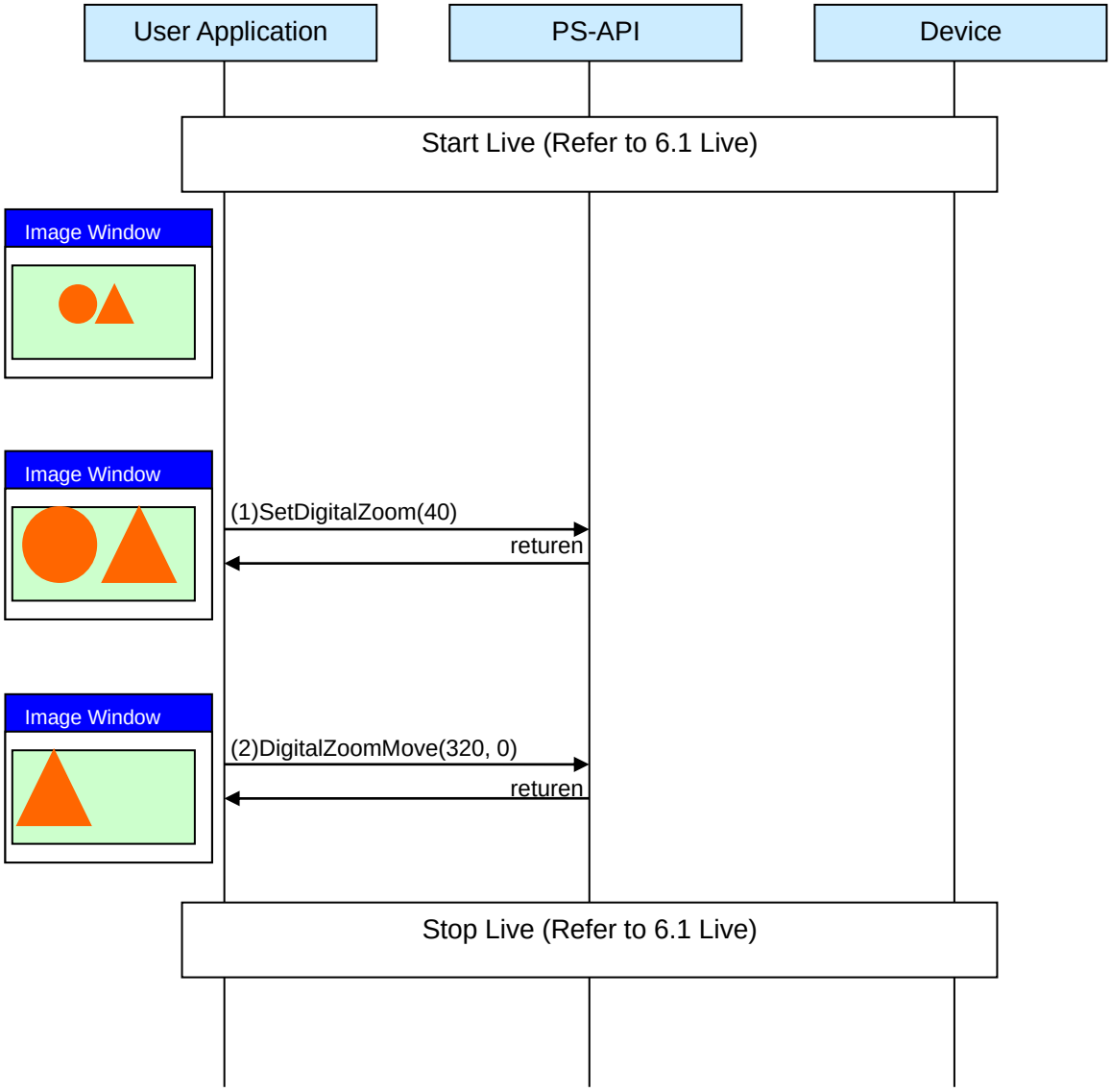

* The timing of sending CGI command is not constant, depends on the device model or the device setting.

Figure 6-31 Digital Zoom

6.13. Overlay

6.13.1. Operation Procedure

Draw Title

No.	Property / Method	Parameter	Description
-	**Start Live (Refer to 6.1 PLayLive)**		
1	TitleOperation	id command text xPosition yPosition align font fontsize foreColor borderColor style (long, long, BSTR, long, long, long, BSTR, long, long, long, long)	Display text strings on the video image. Six texts can be displayed at the same time. Please use text id for recognizing each text. Cannot display the text out of PS-API control. Specify a font name that is installed on using OS. e.g.) 1, 1, "PS-API", 100, 100, 0, "MS UI Gothic", 24, 0, 16777215, 2
-	**Stop Live (Refer to 6.1 PlayLive)**		

Draw Box

No.	Property / Method	Parameter	Description
-	**Start Live (Refer to 6.1 PLayLive)**		
1	BoxOperation	id command color size xTopLeft yTopLeft xBottomRight yBottomRight (long, long, long, long, long, long, long, long)	Display frame lines on the video image. Four boxs can be displayed at the same time. Please use box id for recognizing each box. Cannot display the frame lines out of PS-API control . e.g.) 1, 2, 255, 3, 200, 200, 300, 300
-	**Stop Live (Refer to 6.1 PlayLive)**		

6.13.2. Sequence

Draw Title

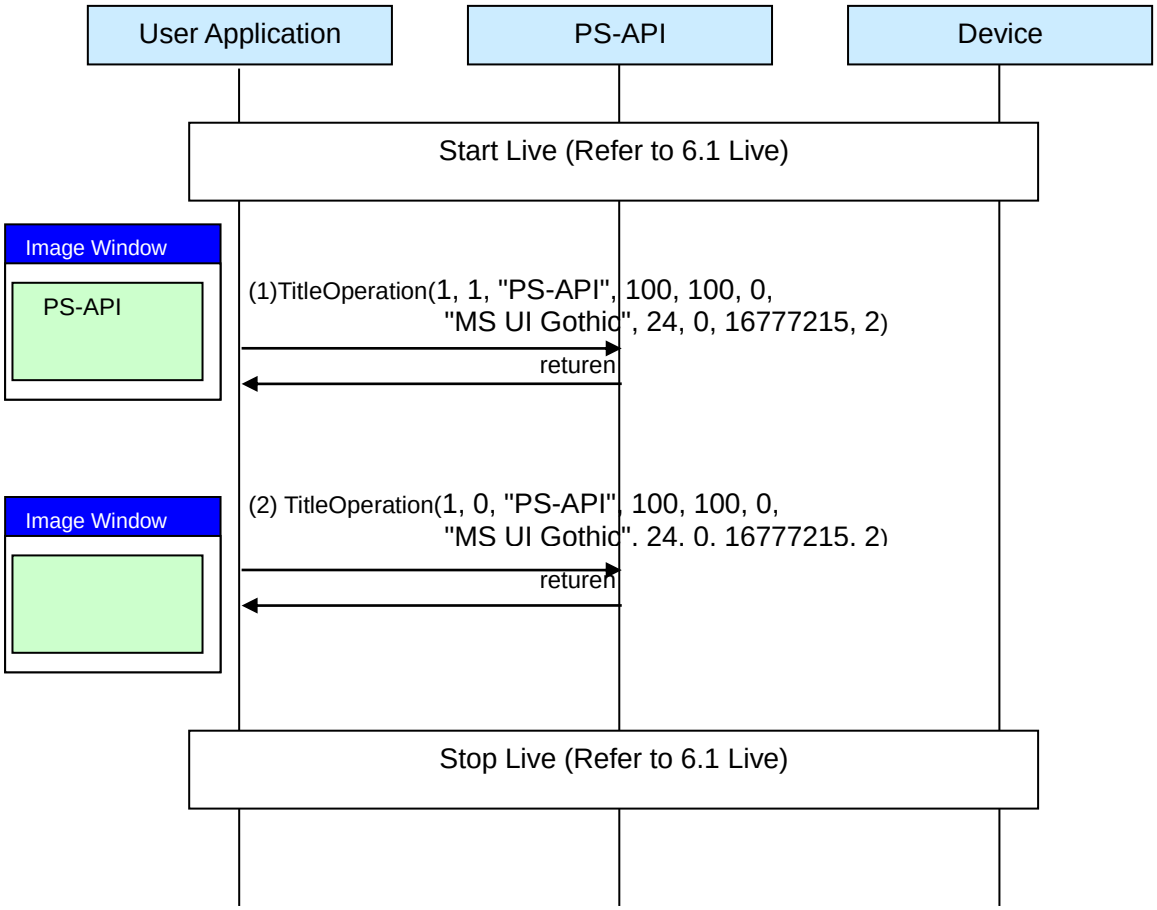

* The timing of sending CGI command is not constant, depends on the device model or the device setting.

Figure 6-32 Display Text Strings

Draw Box

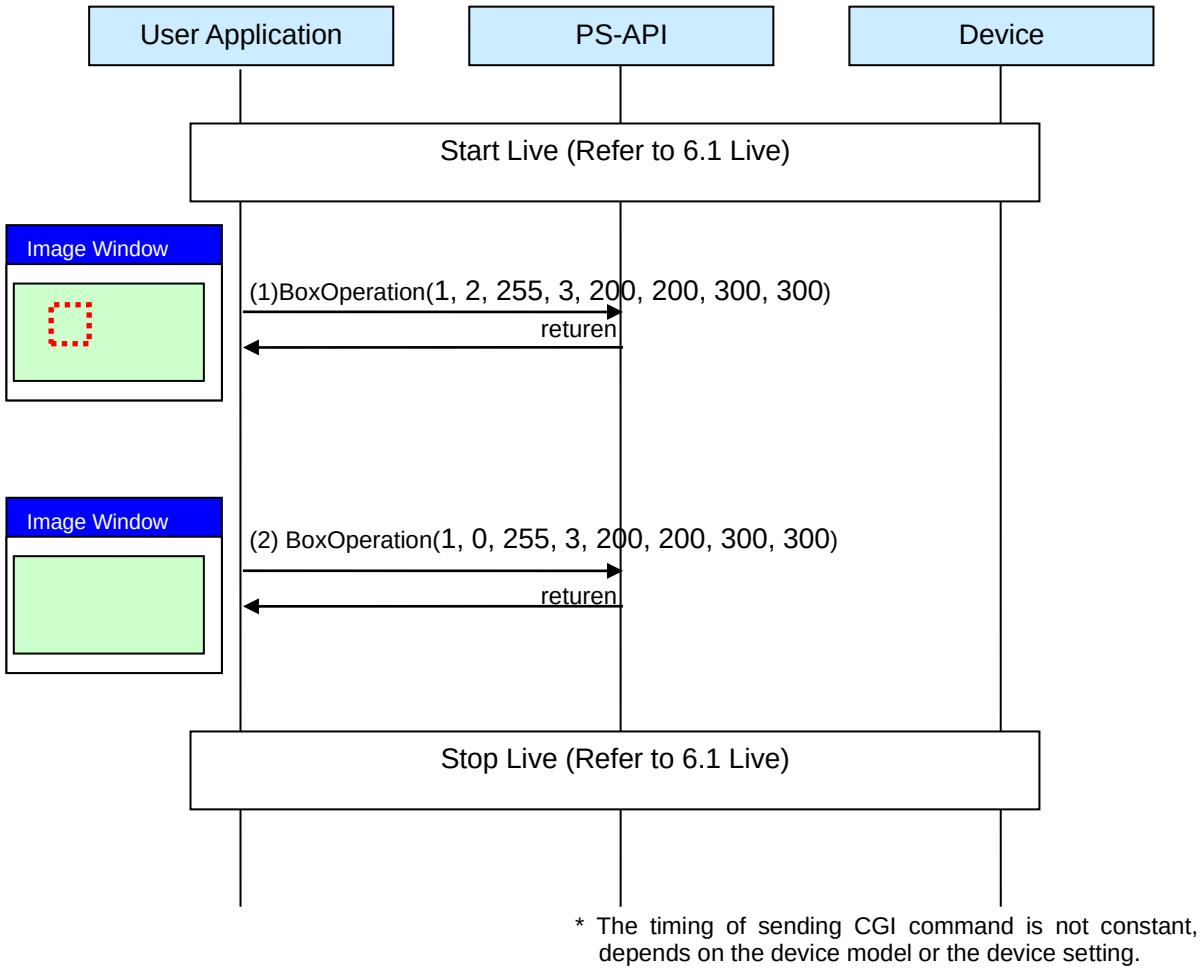

Figure 6-33 Display Frame Lines

6.14. VMDSearch

6.14.1. Operation Procedure

Login

No.	Property / Method	Parameter	Description
-	Login **(Refer to 6.2 Play)**		

VMD search

No.	Property / Method	Parameter	Description
1	(OnSearchExCBEnable)	0	Before using VmdSearchEx method with non-blocking mode, please set OnSearchExCBEnable property to “1”. If OnSearchExCBEnable is set to “0” in case of non-blocking mode, but application cannot receive the notification of finish processing.
2	VmdSearchEx	channel startTimeDate endTimeDate mask aSensitivity axTopLeft ayTopLeft axBottomRight ayBottomRight bSensitivity bxTopLeft byTopLeft bxBottomRight byBottomRight cSensitivity cxTopLeft cyTopLeft cxBottomRight cyBottomRight dSensitivity dxTopLeft dyTopLeft dxBottomRight dyBottomRight imageWidth imageHeight mode (long, BSTR, BSTR, long, long, long, long, long, long, long, long,	Do VMD search. Specify channel, start time and date, end time and date, and searching area A – D as search condition. The search result is set to the SearchResultEx property. Before using SearchEx method with non-blocking mode, please set OnSearchExCBEnable property to “1”. If OnSearchExCBEnable is set to “0” in case of non-blocking mode, but application cannot receive the notification of finish processing. e.g.) 1, "2010/07/01 00:00:00", "2010/07/01 23:59:59", 1, 1, 0, 0, 640, 480, 0, 0, 0, 0, 0, 0, 0, 0, 0, 0, 0, 0, 0, 0, 0, 640, 480, 0

		long, long, long, long, long, long, long, long, long, long, long, long, long, long,)	

Get search result

No.	Property / Method	Parameter	Description
3	SearchResultEx	-	The property that search result will be set.

Logout

No.	Property / Method	Parameter	Description
-	**Logout** **(Refer to 6.2 Play)**		

6.14.2. Sequence

VMD search

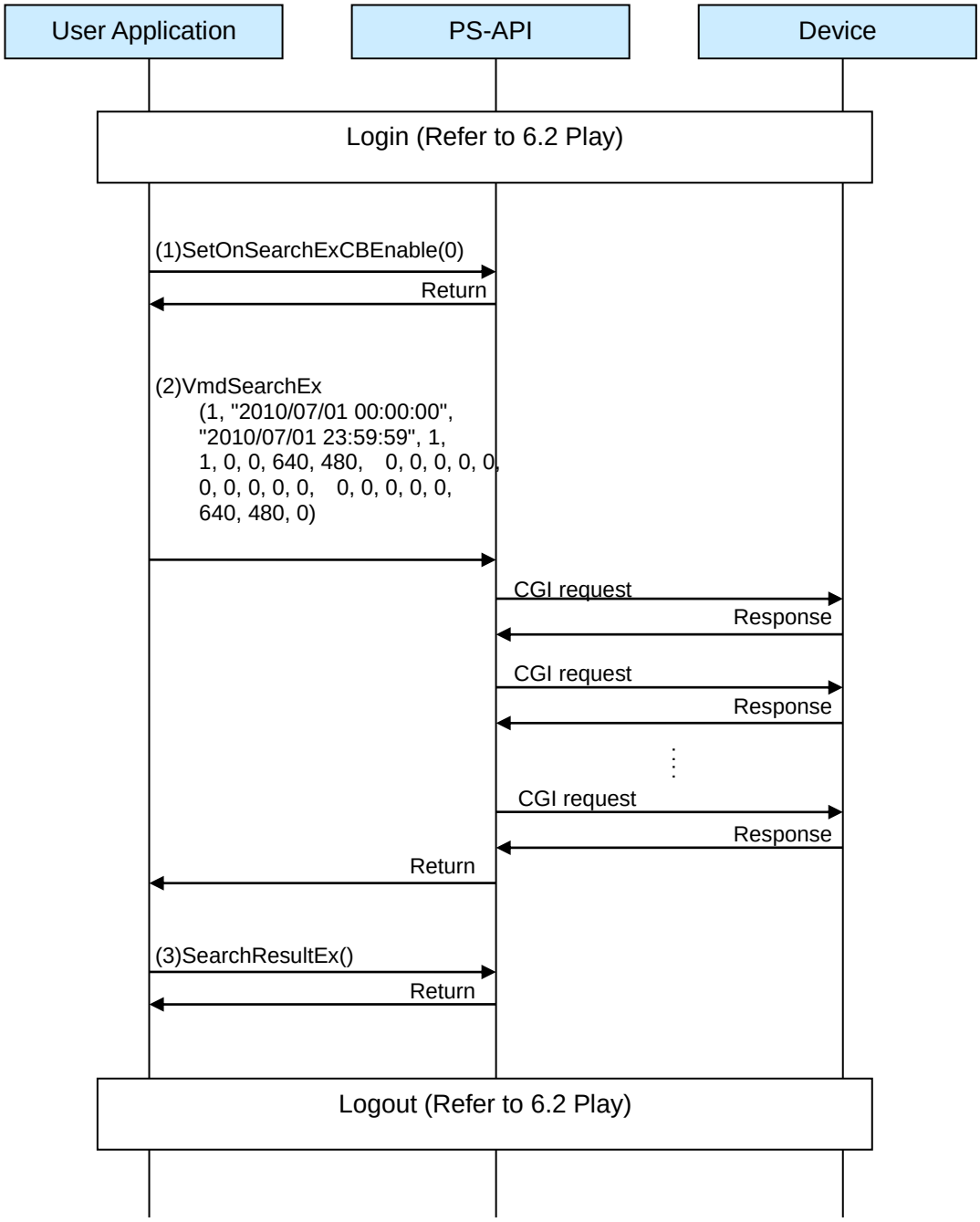

* The timing of sending CGI command is not constant, depends on the device model or the device setting.

Figure 6-34 VMD Search

6.15. Cropping

6.15.1.Operation Procedure

Start Live or **Play** or **PlayFile**

No.	Property / Method	Parameter	Description
-	Start Live (Refer to 6.1 PLayLive) Play (Refer to 6.1 PLay) PlayFile (Refer to 6.1 PLayFile)		Cropping can be set even during execution.

Cropping

No.	Property / Method	Parameter	Description
1	CroppingEnabled	mode (long,)	1：Use Cropping
2	SetCroppingDrawRect	Id, ltX, ltY, rbX, rbY (long, long, long, long, long)	0 :Full screen display area Specify the top-left X position of Cropping area. Specify the top-left Y position of Cropping area. Specify the bottom-right X position of Cropping area. Specify the bottom-right Y position of Cropping area.
3	SetCroppingRect	Id, ltX, ltY, rbX, rbY (long, long, long, long, long)	Cropping area id Specify the top-left X position of Cropping area. Specify the top-left Y position of Cropping area. Specify the bottom-right X position of Cropping area. Specify the bottom-right Y position of Cropping area.
4	SetCroppingDrawRect	Id, ltX, ltY, rbX, rbY (long, long, long, long, long)	Cropping area id Specify the top-left X position of Cropping area. Specify the top-left Y position of Cropping area. Specify the bottom-right X position of Cropping area. Specify the bottom-right Y position of Cropping area.

5	SetCroppingDrawEnabled	id, mode (long, long)	Cropping area id 1:show
6	SetCroppingMarker	id, mode, ltX, ltY, rbX, rbY, lineSize, lineColor, ellipseSize, ellipsecolor (long, long, long, long, long, long, long, long, long, long)	Cropping area id 1:Non edit mode Specify the top-left X position of Cropping area. Specify the top-left Y position of Cropping area. Specify the bottom-right X position of Cropping area. Specify the bottom-right Y position of Cropping area. Width of frame line Frame color Width of vertex Circle Circle color

Stop Live or **Stop Play** or **Stop PlayFile**

No.	Property / Method	Parameter	Description
-	Stop Live (Refer to 6.1 Live) Stop Play (Refer to 6.2 Play) Stop PlayFile (Refer to 6.3 PlayFile)		

6.15.2. Sequence

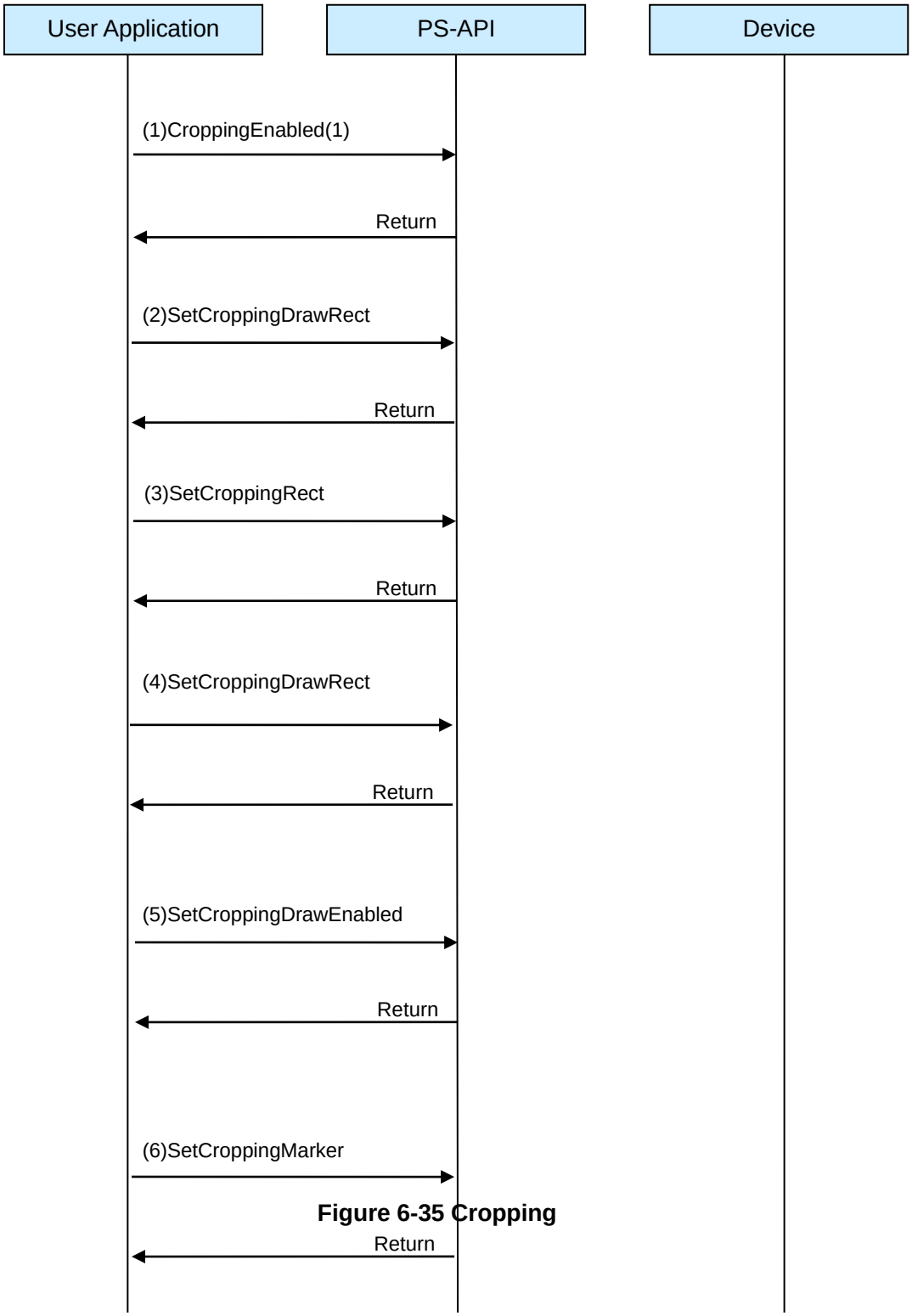

Figure 6-35 Cropping

6.16. HttpMP4Download

6.16.1.Operation Procedure

MP4 file Download(HTTP)

No.	Property / Method	Parameter	Description
1	IPAddr	IP Address (BSTR)	Set IP Address into PS-API. e.g.) “192.168.0.250“
2	DeviceType	Device type (long)	Set the device type corresponding to a NX series. 6
3	HttpPort	Port number (long)	Set Http port number into PS-API. e.g.) 80
4	UserName	Character strings (BSTR)	Set user name into PS-API. e.g.) ADMIN
5	Password	Character strings (BSTR)	Set password into PS-API. e.g.) 12345
6	Open/Connect	UID (long)	Connect to a target device. When getting a new UID, please use Open method.
7	OnMP4DownloadStatusEnable	-	Set MP4 file download status notification. please set OnMP4DownloadStatusEnable property to “1”.

No.	Property / Method	Parameter	Description
8	HttpMP4Download	channel, command, startTimeDate, endTimeDate, audioMode, fileName (long, long, BSTR, BSTR, long, BSTR)	Start HttpMP4Download. Specify channel, command, startTimeDate, endTimeDate, audioMode and fileName as download condition. (This method is non-blocking mode.) e.g.) 1, 1, "2008/12/01 12:00:00", "2008/12/01 12:10:00", 0, "C:¥DownloadFolder¥Downloadfile"
9	OnMP4DownloadStatus	status filename (long BSTR)	Notified when MP4 download status changes.
10	Close/Disconnect	-	Stop the communication with the target device. When using Close method, UID will be annulled.

6.16.2. Sequence

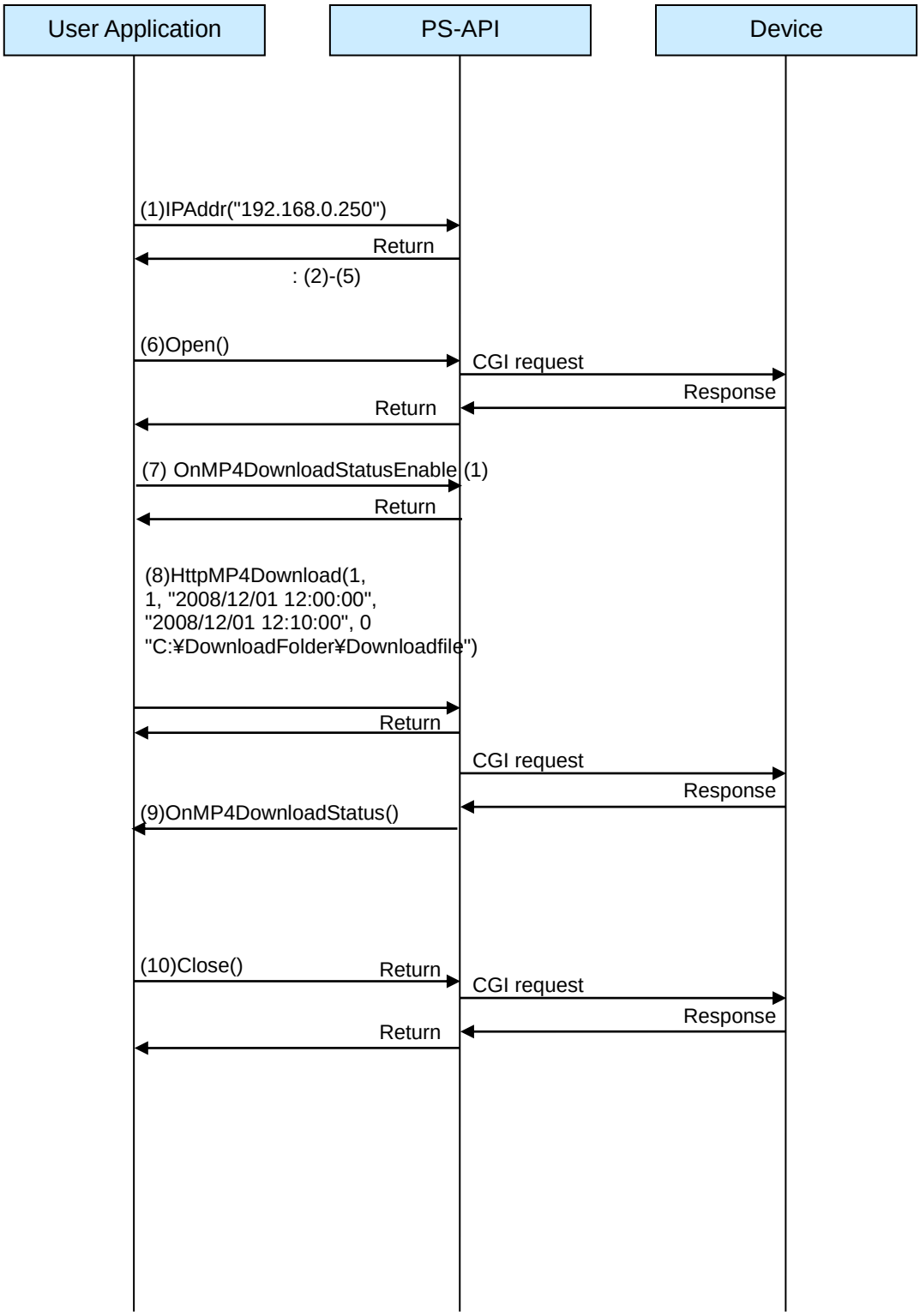

* The timing of sending CGI command is not constant,

Figure 6-35 HttpMP4Download

6.17. SSL(HTTPS)

6.17.1.Operation Procedure

Open with SSL

手順	Property / Method	Parameter	Description
-	Set target device to HTPS settings		
1	IPAddr	IP Address (BSTR)	Set IP Address into PS-API. e.g.) “192.168.0.10”
2	DeviceType	Device type (long)	Set the device type corresponding to a target device. e.g.) 2
3	UserName	Character strings (BSTR)	Set user name into PS-API. e.g.) admin
4	Password	Character strings (BSTR)	Set password into PS-API. e.g.) 12345
5	HttpPort	Port number (long)	Set Https port number into PS-API. e.g.) 443
6	SecureCommunication Mode	HTTP/HTTPS (long)	Set Http or Https mode into PS-API. e.g.) 1
7	CertificateVerifyEnable	check the certificate (long)	Set whether to check the certificate of connecting device during HTTPS communication e.g.) 0
8	Open/Connect	UID (long)	Connect to a target device. When getting a new UID, please use Open method.
*	InternetMode	InternetMode (long)	Set internet mode into PS-API. e.g.)1

6.17.2. Sequence

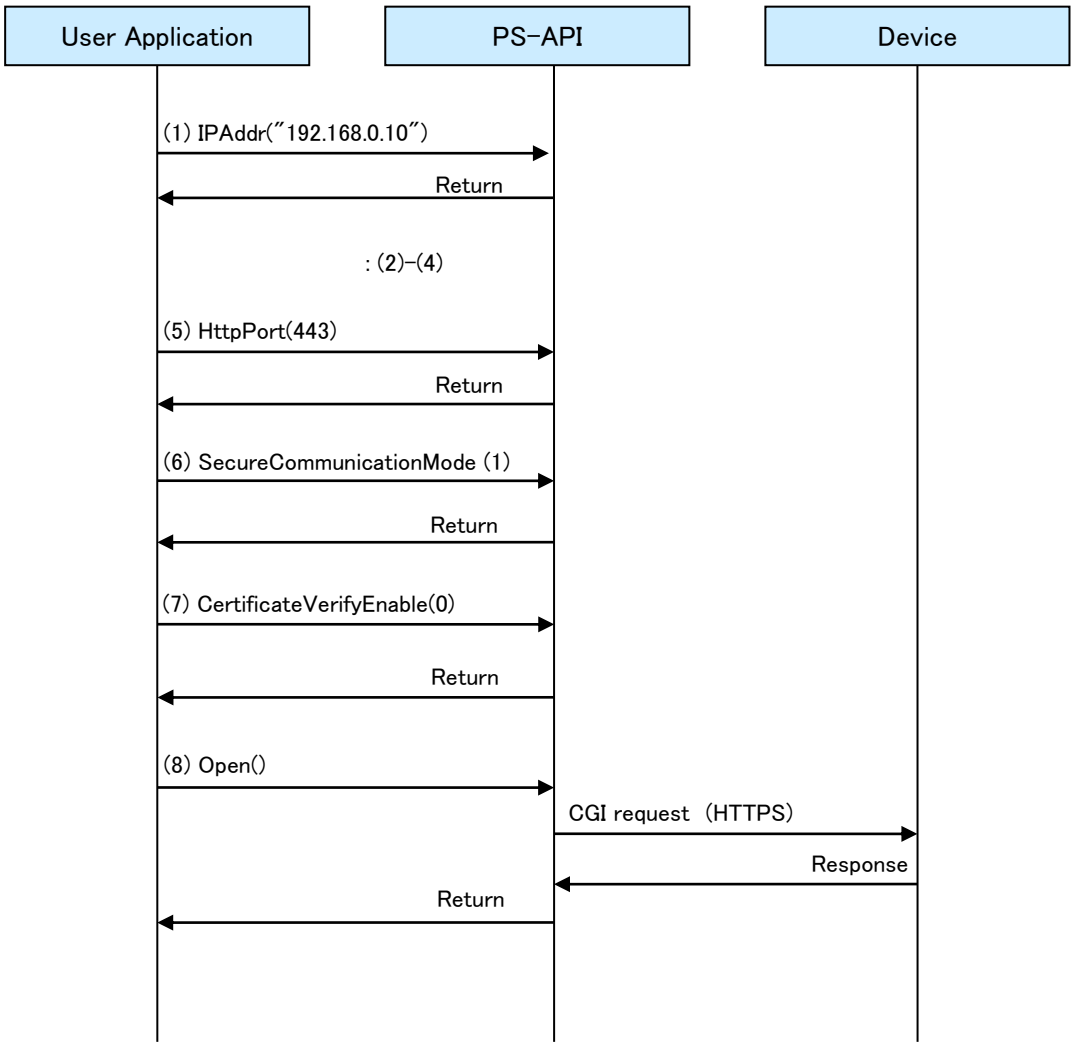

Figure 6-36 Open with SSL

6.18. MultiPlayLive_SID

6.18.1. Operation Procedure

Start Live

No.	Property / Method	Parameter	Description
1	IPAddr	Refer to 6.1 PlayLive	Refer to 6.1 PlayLive
2	DeviceType	Refer to 6.1 PlayLive	Refer to 6.1 PlayLive
3	HttpPort	Refer to 6.1 PlayLive	Refer to 6.1 PlayLive
4	UserName	Refer to 6.1 PlayLive	Refer to 6.1 PlayLive
5	Password	Refer to 6.1 PlayLive	Refer to 6.1 PlayLive
6	StreamFormat	Refer to 6.1 PlayLive	Refer to 6.1 PlayLive
7	JPEGResolution/ MPEG4Resolution/ H264Resolution	Refer to 6.1 PlayLive	Refer to 6.1 PlayLive
8	Open/Connect	Refer to 6.1 PlayLive	Refer to 6.1 PlayLive Call Open method on the first instance. For the second and subsequent instances, connect using the UID obtained by the first Open method.
9	GetSIDInfo	-	Call method only one instance. The information of StreamID support is set to SIDInfoMode property. The maximum number of StreamID that recorder can issue is set to SIDInfoMax property. The number of StreamID which is in use is set to SIDInfoUse property.
10	SIDInfoMode	StreamID support (long)	Refer to the SIDInfoMode property and check whether StreamID mode is supported. If SIDInfoMode is 0 (not supported), refer to the sequence of 6.9 MultiPlay Live. e.g.) 1
11	SIDMode	StreamID Mode(long)	Set SIDMode on every instance that perform PlayLive method. e.g.) 1
12	PlayLive	Refer to 6.1 PlayLive	Refer to 6.1 PlayLive

Stop Live

No.	Property / Method	Parameter	Description
13	PlayControl	Refer to 6.1 PlayLive	Refer to 6.1 PlayLive
14	Close/Disconnect	Refer to 6.1 PlayLive	Refer to 6.1 PlayLive If there are more than one instance, call Disconnect. call Close on the last one instance

6.18.2. Sequence

Start Live

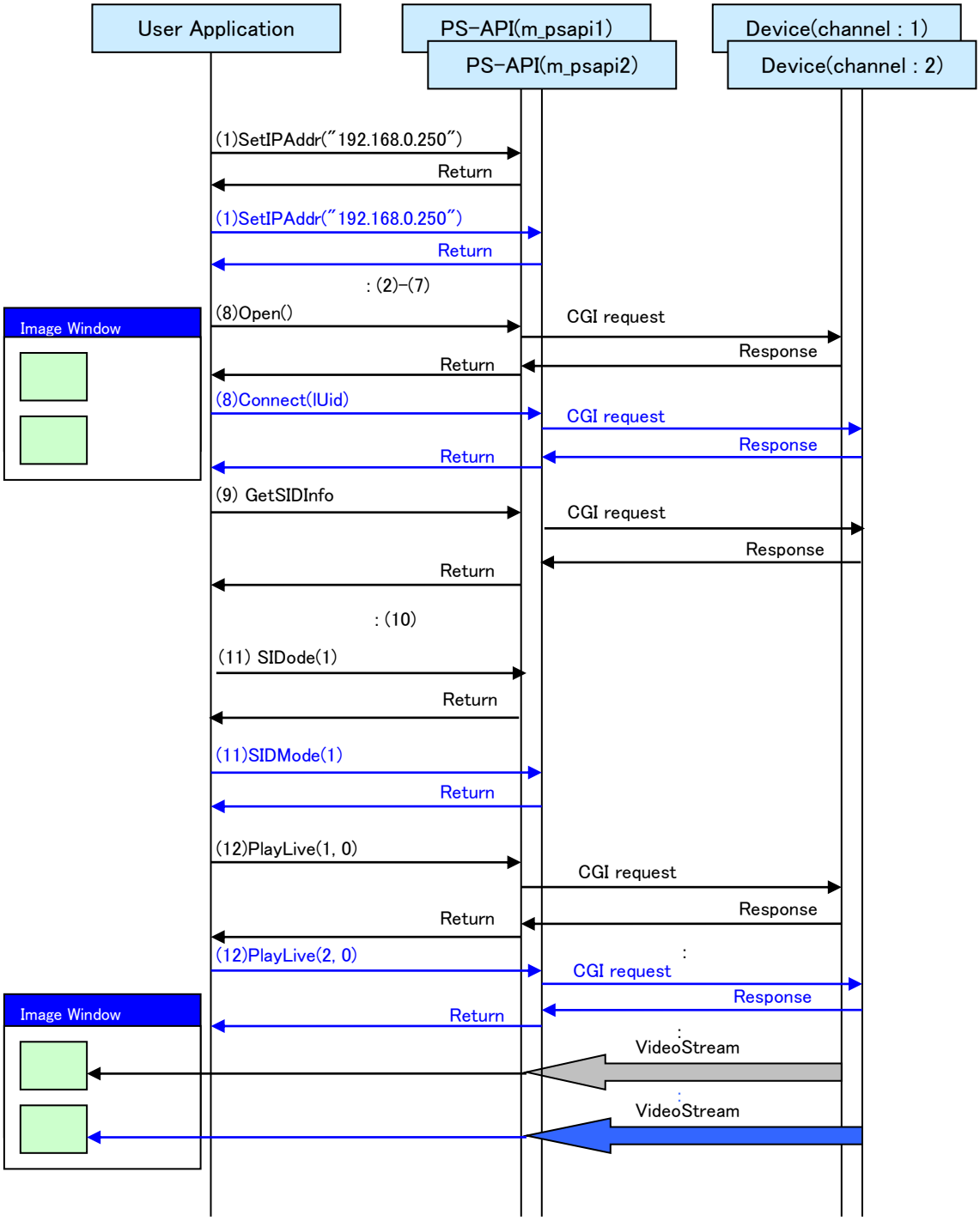

* The timing of sending CGI command is not constant, depends on the device model or the device setting.

Figure 6-37 Start Live

Stop Live

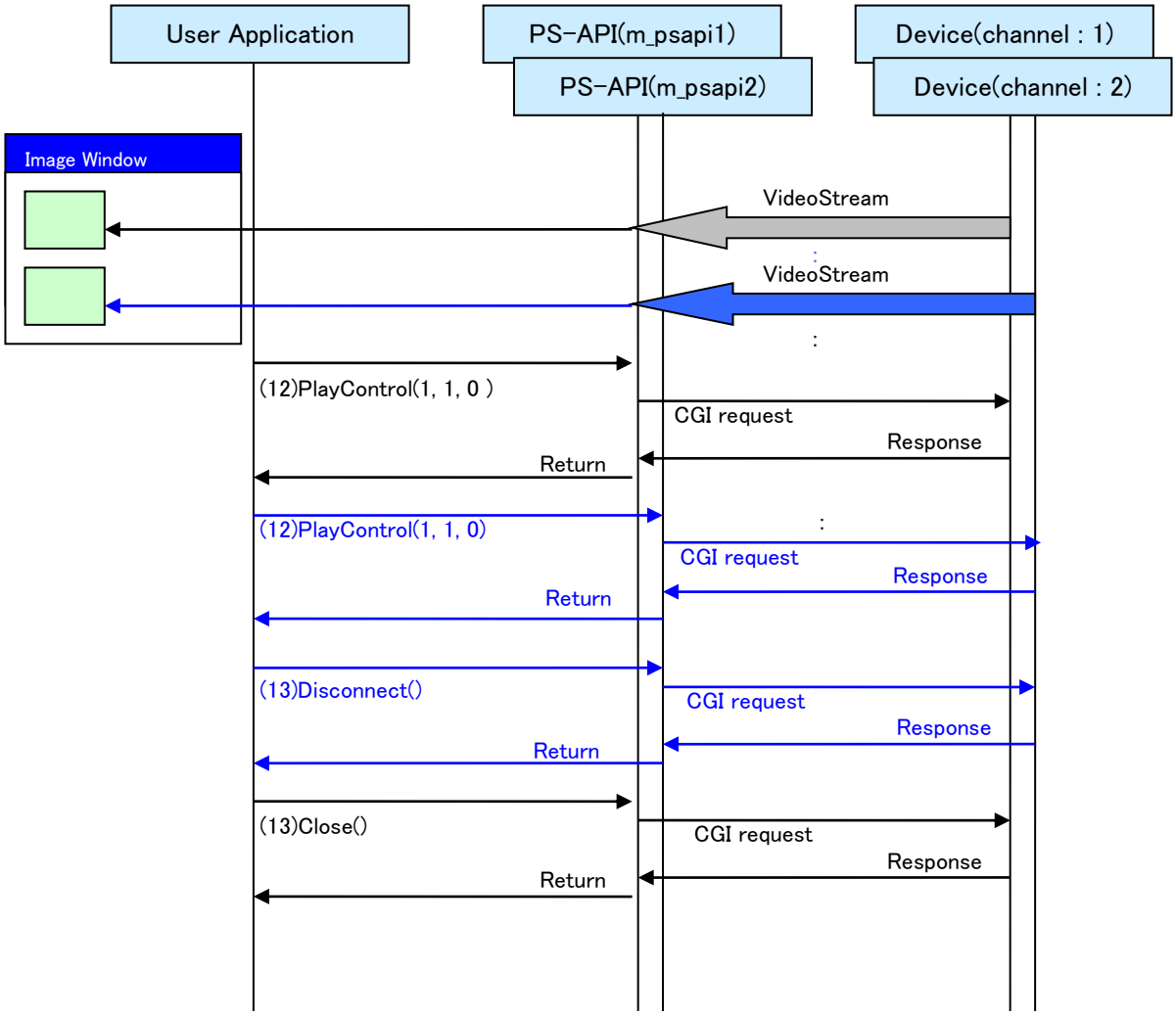

* The timing of sending CGI command is not constant, depends on the device model or the device setting.

Figure 6-38 Stop Live

7. Error Code List

The error code is defined by the following format. (decimal, 8digits)

$-D_1A_1C_1M_1M_2Z_1Z_2Z_3$

-D1 Category	A_1 Level	C_1 Source	M_1M_2	$Z_1Z_2Z_3$ Code	Error Description
-1: Common	1:error 2:warning	1:PS-API error 2:communication error 3:device error	(internal use)	001	Invalid Pointer
				002	Invalid State
				003	SDK Busy
				004 : 012	SDK internal error
				013	Request Not Suported
				014	Parameter is invalid
				015	Specific Memory Insufficicent
				016 : 025	SDK internal error
				029	Async method queuing limit exceeded error

-D1 Category	A1 Level	C1 Source	M1M2	Z1Z2Z3 Code	Error Description
-2: Video	1:error 2:warning	1:PS-API error 2:communication error 3:device error 4:PS-API error 5:PS-API error	(internal use)	001 : 009	Video module initialize error
				010	Parameter Error (ProxyName, ProxyPort)
				011 : 030	Video module initialize error
				031	Faild to create decoder filter
				032 : 088	Video module initialize error
				089	Network error
				090	Open Socket error
				091	Close Socket error
				092 : 095	Network error for Live (MPEG-4/H.264/H.265)
				096 : 099	Network error for Play
				100 : 103	Error for FilePlay
				104 : 107	Network error for Live (JPEG)
				108 : 111	Network error for HDR
				112 : 129	SDK internal error
				130 131	Setting UID error (MPEG-4/H.264/H.265)
				132	Obtaining Device Info error(MPEG-4/H.264/H.265)
				133	Obtaining Play Status error(MPEG-4/H.264/H.265)
				134	MultiScreenChannel error (MPEG-4/H.264/H.265)
				135	SDK internal error
				136 137	Setting UID error (JPEG)
				138	Obtaining Device Info error(JPEG)
				139	Obtaining Play Status error(JPEG)
				140	MultiScreenChannel error (JPEG)
				141	SDK internal error

-D1 Category	A1 Level	C1 Source	M1M2	Z1Z2Z3 Code	Error Description
-2: Video	1:error 2:warning	1:PS-API error 2:communication error 3:device error 4:PS-API error 5:PS-API error	(internal use)	142 143	Setting UID error (HDR)
				144	Obtaining Device Info error(HDR)
				145	Obtaining Play Status error(HDR)
				146	MultiScreenChannel error (HDR)
				147	SDK internal error
				148	Live Operation Error
				149	Play Operation Error
				150	FilePlay Operation Error
				151	SDK internal error
				152	FileFormat Specified error
				153 : 163	SDK internal error
				164	Device UID is exceeded
				165	Specified video format is incorrect
				166	Specified video stream number is incorrect
				167	channel number is incorrect
				168 : 171	SDK internal error
				186 : 191	SDK internal error
				192	Internet mode setting is mismatch Error.

-D1 Category	A1 Level	C1 Source	M1M2	Z1Z2Z3 Code	Error Description
-2: Video	1:error 2:warning	1:PS-API error 2:communication error 3:device error 4:PS-API error 5:PS-API error	(internal use)	200	Parameter Error (DeviceType)
				201	Parameter Error (ImageFormat)
				202	SDK internal error
				203	Parameter Error (HttpPort)
				204	Parameter Error (AccessType error
				205	Parameter Error (ProxyPort)
				206 : 214	SDK internal error
				215	Parameter Error (Channel)
				216	SDK internal error
				217	Parameter Error (MulticastPort)
				218 : 223	SDK internal error
				224	Parameter Error (IpAddress)
				225	Parameter Error (ProxyName)
				226	Parameter Error (UID error)
				227	Parameter Error (UserName)

-D1 Category	A1 Level	C1 Source	M1M2	Z1Z2Z3 Code	Error Description
-2: Video	1:error 2:warning	1:PS-API error 2:communication error 3:device error 4:PS-API error 5:PS-API error	(internal use)	228	Parameter Error (Password)
				229	SDK internal error
				230	Parameter Error (MultiCastAddress)
				231	SDK internal error
				232	Parameter Error (PlayFile file name)
				233	SDK internal error
				234	Device type and StreamFormat not mutch.
				235 : 237	SDK internal error
				238	Parameter Error (DateTime)
				239	Parameter Error (Resolution)
				240	Parameter Error (Play speed)
				241	CGI send error
				242	Parameter Error (StreamFormat)
				243	Parameter Error (Listener)
				244	Parameter Error (StreamNumber, NXStreamNumber)
				245	Parameter Error (TransFrameRate)
				246	SDK internal error
				247	Parameter Error (AutoMulticast)
				248	Parameter Error Data is NULL
				249	Parameter Error Data size invalid
				250	Parameter Error AudioRcvEnable/AudioSend
				251	Parameter Error AudioRcvVolume/ AudioSendVolume
				252	Parameter Error AudioRcvMute/ AudioSendMute
				253	SDK internal error
				254	Parameter Error SnapShot
				255	No data error (SnapShot)

-D1 Category	A1 Level	C1 Source	M1M2	Z1Z2Z3 Code	Error Description
-2: Video	1:error 2:warning	1:PS-API error 2:communication error 3:device error 4:PS-API error 5:PS-API error	(internal use)	256	Parameter Error Overlay ID
				257	Parameter Error Overlay ICommand
				258	Parameter Error Overlay IText
				259	Parameter Error Overlay IxPosition
				260	Parameter Error Overlay IyPosition
				261	Parameter Error Overlay Ialign
				262	Parameter Error Overlay Ifont
				263	Parameter Error Overlay Ifontsize
				264	Parameter Error Overlay IforeColor
				265	Parameter Error Overlay IborderColor
				266	Parameter Error Overlay Istyle
				267	Parameter Error Overlay Icommand
				268	Parameter Error Overlay Icolor
				269	Parameter Error Overlay Isize
				270	Parameter Error Overlay IxTopLeft
				271	Parameter Error Overlay IyTopLeft
				272	Parameter Error Overlay IxBottomRight
				273	Parameter Error Overlay IyBottomRight
				274	Parameter Error GetTitle
				275	SDK internal error
				276	SDK internal error
				277	SDK internal error
				278	SDK internal error
				279	SDK internal error

-D1 Category	A1 Level	C1 Source	M1M2	Z1Z2Z3 Code	Error Description
-2: Video	1:error 2:warning	1:PS-API error 2:communication error 3:device error 4:PS-API error 5:PS-API error	(internal use)	280	Parameter Error DigitalZoom
				281	Parameter Error DigitalZoomMove
				282	Parameter Error DigitalZoomMode
				283	Parameter Error BackColor
				284 : 288	SDK internal error
				289	Parameter Error PlayControlByTime
				290	Parameter Error DST
				291	Parameter Error PictureFitMode
				292	Parameter Error DecResolutionMode
				293	Parameter Error FilePassword
				294	Parameter Error InternetMode
				297	Parameter Error Overlay transmissivity
				298	Parameter Error Overlay Bitmap file
				299	Parameter Error Overlay maskColor

-D1 Category	A1 Level	C1 Source	M1M2	Z1Z2Z3 Code	Error Description
-2: Video	1:error 2:warning	1:PS-API error 2:communication error 3:device error 4:PS-API error 5:PS-API error	(internal use)	300	Parameter is not set
				301	Dupplicate Open error
				302	Already Open/Connect error
				303 : 305	Error occurred Not Open/Connect error
				306	Stop Live operation fails because Live is not started
				307	Stop Play operation fails because Play is not started
				308	Stop PlayFile operation fails because PlayFile is not started
				309	Play/PlayFile/DecodeImage/ HttpMP4Download operation fails because Live is starting
				310	Live/PlayFile/DecodeImage/ HttpMP4Download operation fails because Live is starting
				311	Live/Play/DecodeImage/ HttpMP4Download operation fails because Live is starting
				312	Play for Camera/Encoder is not available
				313 : 315	SDK internal error
				316	Stopping AudioSend fails because AudioSend is already stopped
				317	SDK internal error
				318	Starting AudioSend fails because AudioSend is already started
				319	Receive Audio is disconnected
				320	Send Audio is disconnected
				321	Device does not support audio Device setting is invalid
				322	Device does not support format
				323	DigitalZoomMove error because DigitalZoom is x1.
				324 : 330	SDK internal error
				331	Specified password for n3r/n3a invalid.
				332 : 336	SDK internal error
				337	Video is not updating for a while.

-D1 Category	A1 Level	C1 Source	M1M2	Z1Z2Z3 Code	Error Description
-2: Video	1:error 2:warning	1:PS-API error 2:communication error 3:device error 4:PS-API error 5:PS-API error	(internal use)	342	Device doesn't support StreamID.
				343	Fail to start Live/Network playback by StreamID exhaustion.
				344	Fail to start Live/Network playback by the error except StreamID exhaustion.
				345	StreamID parameter error.
				346	Failure of keep-alive for StreamID.
				347	StreamID invalid.
				349	Decode by the upper limit of resolution is not supported.
				399	SSL Communication is not Available

-D1 Category	A1 Level	C1 Source	M1M2	Z1Z2Z3 Code	Error Description
-2: Video	1:error 2:warning	1:PS-API error 2:communication error 3:device error 4:PS-API error 5:PS-API error	(internal use)	401	Failed to create thread.
				402	Failed to create event handle
				403 404	Failed to create thread.
				405	Memory error
				406	Library load errro.
				407 408	SDK internal error.
				409	Failed to allocate memory
				501	Audio operation invalid.
				502	DeviceType is invalid for Audio operation.
				503 504	SDK internal error.
				505	Failed to create thread.
				506	Failed to delete thread.
				507	Failed to create thread.
				508	Failed to delete thread.
				509	SDK internal error.
				510 : 512	Device returns error for audio related CGI.
				513	Faild to create socket.
				514	Faild to delete socket.
				515	Faild to start AudioSend. Another client sending audio.
				516	Specified channel does not support Audio.
				517	Device does not support sending audio from client.
				518	Device does not support recieving audio by client.
				519	Device does not support sending audio from client.
				520 : 582	SDK internal error.
				583 : 590	The audio device of PC is not correctly set.

-D1 Category	A1 Level	C1 Source	M1M2	Z1Z2Z3 Code	Error Description
-2: Video	1:error 2:warning	1:PS-API error 2:communication error 3:device error 4:PS-API error 5:PS-API error	(internal use)	591 : 612	SDK internal error.
				702	Parameter Error Port range value
				704	Parameter Error GetSIDInfo value.
				705	Parameter Error SIDMode value.
				710	Parameter error CamSnapShot channel
				711	Parameter error CamSnapShot mode
				712	CamSnapShot Not supported
				752	Parameter is out of range. HttpMP4download channel
				753	Parameter is out of range. HttpMP4download command
				754	Parameter Error. (startTimeDate)
				755	Parameter Error. (endTimeDate)
				756	Parameter is out of range. HttpMP4download audioMode
				757	Parameter is illegal characters or exceeded of characters. HttpMP4download filename
				770	Time difference is 60 minutes or more. HttpMP4Download startTime and endTime
				779	Parameter is out of range Cropping id
				780	Parameter is out of range Cropping mode
				781	Parameter is out of range Cropping rate
				782	Parameter is out of range Cropping marker size
				783	Parameter is out of range Cropping marker color
				784	Position coordinate error CroppingDrawRect (ltX, ltY) > (rbX, rbY)
				785	Parameter is out of range Cropping MaxRate
				786	Position coordinate error CroppingMarker (ltX, ltY) > (rbX, rbY)
				787	Position coordinate error CroppingRect (ltX, ltY) > (rbX, rbY)

-D1 Category	A1 Level	C1 Source	M1M2	Z1Z2Z3 Code	Error Description
-2: Video	1:error 2:warning	1:PS-API error 2:communication error 3:device error 4:PS-API error 5:PS-API error	(internal use)	809	HttpMP4Download is not started
				810	HttpMP4Download is starting
				811	Recording data is JPEG only
				812	No recording data at the specified time
				813	Device MP4download number is exceed
				837	HttpDownload is not started
				838	HttpDownload is starting
				839	Recording data is JPEG only
				840	No recording data at the specified time
				841	Device download number is exceed

-D1 Category	A_1 Level	C_1 Source	M_1M_2	$Z_1Z_2Z_3$ Code	Error Description
-3: Control	1:error 2:warning	1:PS-API error 2:communication error 3:device error	(internal use)	201	Parameter Error (DeviceType)
				202	Parameter Error (AccessType)
				203	Parameter Error (IpAddr)
				204	Parameter Error (HttpPort)
				205	Parameter Error (HttpTImeout)
				206	Parameter Error (ProxyName)
				207	Parameter Error (ProxyPort)
				208	Parameter Error (Internal parameter)
				209	Parameter Error (Internal parameter)
				210	Parameter Error (UserName)
				211	Parameter Error (Password)
				212	Parameter Error (Internal parameter)
				310 : 349	Parameter Error

-D1 Category	A_1 Level	C_1 Source	M_1M_2	$Z_1Z_2Z_3$ Code	Error Description
-3: Control	1:error 2:warning	1:PS-API error 2:communication error 3:device error	(internal use)	601	Request failed by internal state.
				602	The response of the target device is incorrect.
				603	Username or password is incorrect.
				604	The method is executed for not-supported device.
				605	UID is invalid
				606	Specified control (Pan/Tilt or Zoom) is not supported for this device, specified control is invalid.
				607	Focus is not supported for this device, specified control is invalid.
				608	Pan/Tilt/Zoom has priority, specified control is invalid.
				609	There is no device information of the specified channel.
				610	Auto Pan/Auto Track/Auto Focus is not supported for this device, specified operation is invalid.
				611	This method is already executed.
				612	Trigger on/Trigger off is not supported for this device, specified operation is invalid.
				613	Trigger on/Trigger off is not supported for this device, specified operation is invalid.
				614	Search condition is not specified.
				615	DeviceType mismatch for the target device.
				616	Delete Preset is not supported for this device.
				617	SD backup condition doesn't have priority.
				618	StartTime and EndTime is same, or EndTime is smaller than StartTime.
				619	The specified time and date (2035/01/01 00:00:00 or after) is invalid.
				620	(Internal use)
				621	(Internal use)
				622	Set Preset is invalid during Auto Pan.
				623	Home position cannot be set/deleted.

-D1 Category	A_1 Level	C_1 Source	M_1M_2	$Z_1Z_2Z_3$ Code	Error Description
-3: Control	1:error 2:warning	1:PS-API error 2:communication error 3:device error	(internal use)	624	Login error (user excess)
				625	Login error (network impossible)
				626	Login error (host attestation)
				627	Login error (config state)
				628	Login error (measurement)
				629	Login error (config user attestation)
				630	Login error (rebooting state)
				631	Login error (sleep state)
				632	Login error (play only state)
				633	Login error (no disk)
				634	Login error (IP easy setting state)
				635	Login error (change setting state)
				636	Login error (blackout)
				637	Login error (system error)
				638	Login error
				639	Receive no-content response from a target device.
				640	ABF control is not supported for this device.
				641	Super Dynamic control is not supported for this device.
				642	Search method is not executed.
				643	There is no current device information.
				644	There is no Keyword in the current device information.
				645	Preset control is not supported for this device.
				646	In case of VMD search, multiple channel cannot be specified.

-D1 Category	A_1 Level	C_1 Source	M_1M_2	$Z_1Z_2Z_3$ Code	Error Description
-3: Control	1:error 2:warning	1:PS-API error 2:communication error 3:device error	(internal use)	647	Preset sequence control is not supported for this device.
				648	Auto sort control is not supported for this device.
				649	Patrol control is not supported for this device.
				650	Specified patrol number is not supported for this device.
				653	Time and date format is invalid.
				656	Failed to open file.
				657	Failed to write in file.
				658	The specified duration is invalid.
				659	The combination of parameter is invalid
				660	Specified Super Dynamic number is not supported for this device.
				663	SSL module is not exist
				701 : 704	Communication Error
				705	Failed to authentication of login.
				706	There is no specified URL.
				707	Access denied from device.
				708	Error occurred inside device.
				709	Error occurred with HTTP response or other.
				710	No response and timeout.
				711	Failed to HttpQueryInfo.
				712	Failed to InternetReadFile.
				801	Invalid certificate
				803	Certificate expired
				901	Failed to allocate memory.
				902	Failed to create thread.
				903	Failed to create class.
				999	Exception Error

-D1 Category	A_1 Level	C_1 Source	M_1M_2	$Z_1Z_2Z_3$ Code	Error Description
-5: FTP	1:error 2:warning	1:PS-API error 2:communication error 3:device error	(internal use)	201	Parameter Error (Device Type)
				202	Parameter Error (Access Type)
				203	Parameter Error (Http URL)
				204	Parameter Error (Http Port Number)
				205	Parameter Error (Http TimeOut)
				206	Parameter Error (Proxy Name)
				207	Parameter Error (Proxy Port Number)
				208	Parameter Error (Retry Count)
				209	Parameter Error (Retry Time)
				210	Parameter Error (User Name)
				211	Parameter Error (Password)
				212	Parameter Error (Health Check)
				213	Parameter Error (UID)
				214	Parameter Error (UID OutPut Pointer Is NULL)
				215	Parameter Error (UID OutPut Size)
				216	Parameter Error (FTP Port Number)
				217	Parameter Error (FTP Port Number OutPut Pointer Is NULL)
				218	Parameter Error (Trans Mode)
				219	Parameter Error (Trans Mode OutPut Pointer Is NULL)
				220	Parameter Error (Device Type)

-D1 Category	A_1 Level	C_1 Source	M_1M_2	$Z_1Z_2Z_3$ Code	Error Description
-5: FTP	1:error 2:warning	1:PS-API error 2:communication error 3:device error	(internal use)	221	Parameter Error (FTP Status OutPut Pointer Is NULL)
				222	Parameter Error (FTP Transmission Rate OutPut Pointer Is NULL)
				223	Parameter Error (FTP Transmission Byte OutPut Pointer Is NULL)
				224	Parameter Error (Channel)
				225	Parameter Error (Start Date Time Pointer Is NULL)
				226	Parameter Error (End Date Time Pointer Is NULL)
				227	Parameter Error (Time)
				228	Parameter Error (Type)
				229	Parameter Error (File Name Pointer Is NULL)
				230	Parameter Error (Event Type)
				231	Parameter Error (File Name)
				232	Parameter Error (SD Event and the others cannot be specified together.)
				301	FTP Transmission State
				302	FTP Not Transmission State
				303	UID Setting State
				304	UID Not Setting State
				305	Network Parameter Not Setting State

-D1 Category	A_1 Level	C_1 Source	M_1M_2	$Z_1Z_2Z_3$ Code	Error Description
-5: FTP	1:error 2:warning	1:PS-API error 2:communication error 3:device error	(internal use)	601	Download Thread Stop Error
				701	InternetOpen Error
				702	InternetConnect Error
				703	HttpOpenRequest Error
				704	HttpSendRequest Error
				705	FtpOpenFile Error
				711	HttpQueryInfo Error
				712	InternetReadFile Error
				713	Get UID Error
				715	Data Damage Error
				720	No Audio File
				901	GetMessage Error
				902	Download Thread Create Error
				903	File Open Error
				904	File Write Error