TOA

SPEAKER MOUNT BRACKET

SP-201

■DESCRIPTION

The SP-201 Speaker mounting bracket is used to mount a horn speaker to a wall. It can also mount the speaker on a ø200 – ø340 mm (ø7.9" – ø13.4") pole in conjunction with the optional YS-60B.

Note: For added safety, reinforce mounting brackets and mounting bands when installing a speaker in a location that will be exposed to significant vibration and/or strong wind. It is also recommended that the installed speaker, mounting brackets, and mounting bands be checked periodically to assess potentially dangerous excessive wear and/or loose connections.

■SPECIFICATIONS

Load Capacity	10 kg (22 lb)
Finish	Bracket: Stainless Steel Screw: Stainless Steel
Weight	610 g (1.34 lb) (bracket only)
Product Composition	Mounting bracket ···1, Mounting screw (M10 × 25 bolt set, M8 ×20 bolt set) ···each 1 set

■APPEARANCE

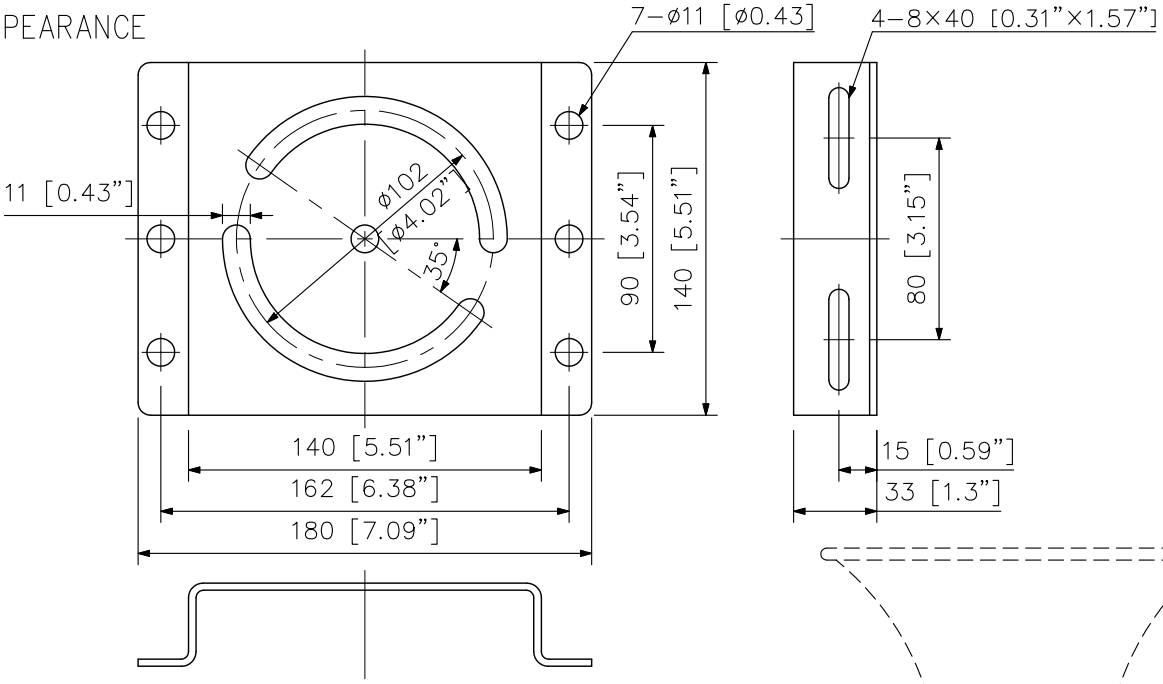

Mounting bracket (t3.0)

Angle installation

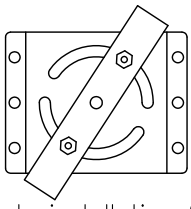

Angle installation for 51 mm (2.01") pitch

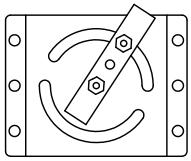

Angle installation for 25 mm (0.98") pitch

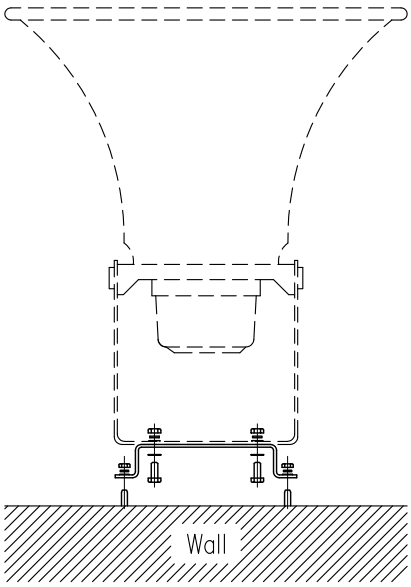

Speaker mounting example

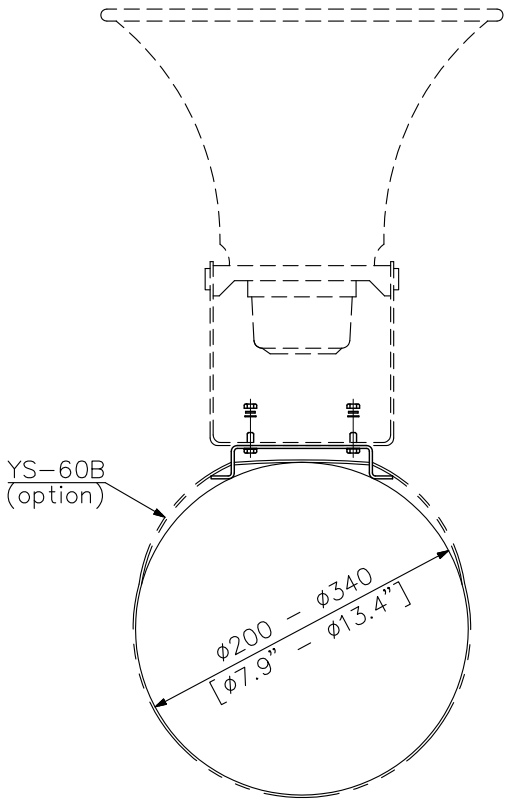

Speaker mounting example

UNIT: mm SCALE: 1/3