M-JB-MINI

Fixed Dome Junction Box

Technical Specifications

Application	Junction box for fixed dome
Dimensions	ϕ106.6mm*36mm (4.20” x 1.42”)
Weight	0.2kg(0.44lb)
Material	Aluminum alloy

Dimensions

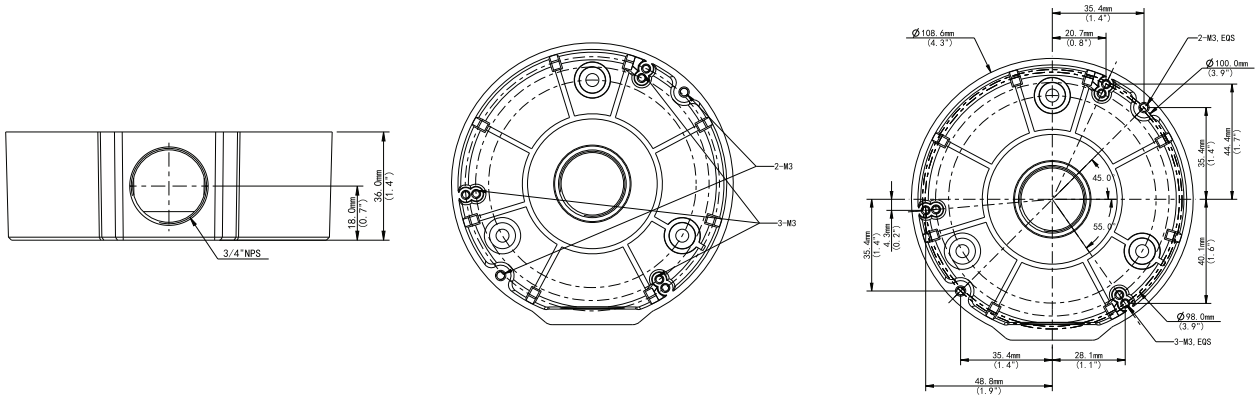

R010422 | Product specifications and availability are subject to change without notice.

© i-PRO Co., Ltd. All Rights Reserved. i-PRO, Viewnetcam.com, Advidia, VideoInsight, CloUDE, and Unified Digital Evidence are registered trademarks or trademarks of i-PRO Co., Ltd. or i-PRO Americas Inc. in various jurisdictions. All other trademarks are the property of their respective owners.