M-JB-MINI

Fixed Dome Junction Box

Technical Specifications

Application	Junction box for fixed dome
Dimensions	ϕ106.6mm*36mm (4.20” x 1.42”)
Weight	0.2kg(0.44lb)
Material	Aluminum alloy

Dimensions

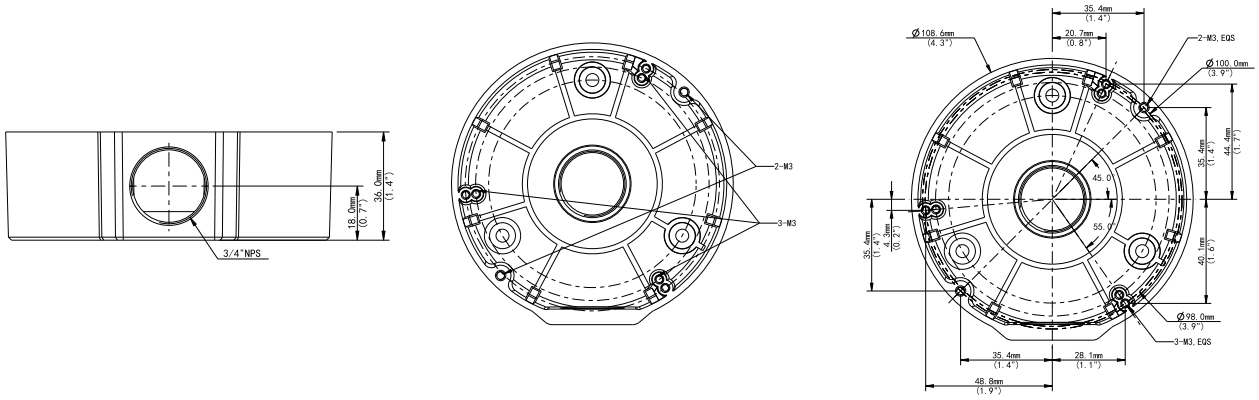

R010422 | Product specifications and availability are subject to change without notice.

Panasonic i-PRO Sensing Solutions Co., Ltd. i-PRO, Viewnetcam.com, FacePRO, Advidia, VideoInsight, Arbitrator, CloUDE, and Unified Digital Evidence are registered trademarks or trademarks of Panasonic i-PRO Sensing Solutions Co., Ltd. or Panasonic i-PRO Sensing Solutions Corporation of America in various jurisdictions. All other trademarks are the property of their respective owners.